We ***design***,
manufacture,
and ***install***
lab furniture.

METROLABS

Lab Furniture | Fume Hood | Anti-Vibration Table | Laminar Air Flow

We are there when you need us !

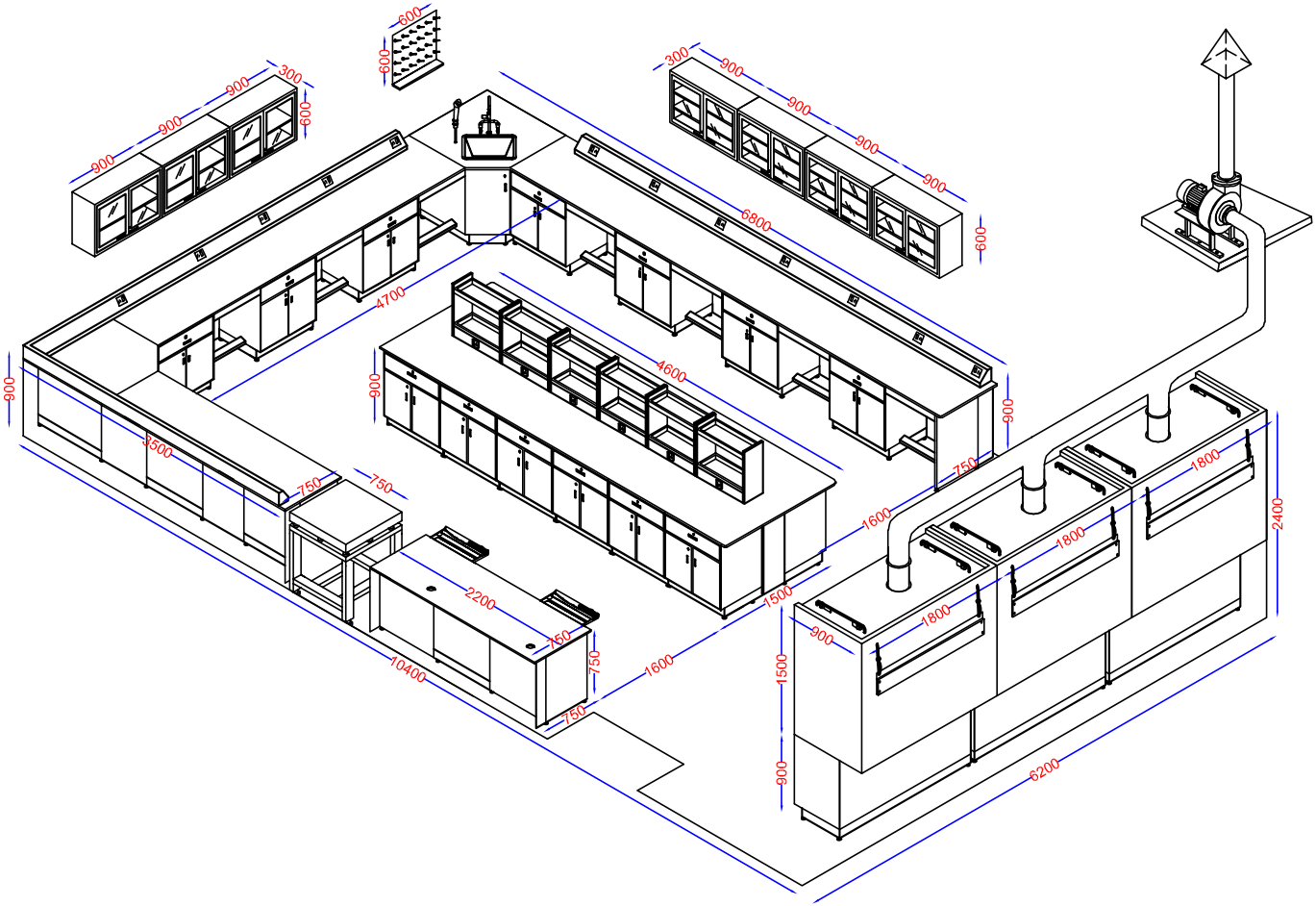

LAB FURNITURE CATALOGUE

CAT No.: C8 / 2024

www.metrolabs.biz

YOUR KEY BENEFITS WITH METROLABS

METROLABS
Lab Furniture | Fume Hood | Anti-Vibration Table | Laminar Air Flow
We are there when you need us !

⇒ We design your vision - Customer focused interactive design process.

⇒ Professionals at your doorstep - Real time design with site inspection.

⇒ Design before you Decide! Free-of-cost lab design before quotation.

⇒ No fear of fire - All our products are fire-resistant.

⇒ Precise manufacturing, colour options, and on time completion.

⇒ Ease of contact, immediate response time, we deliver exactly what you expect.

⇒ We care for your lab furniture throughout its life.

⇒ We give the best after-sales service.

We are there when you need us!

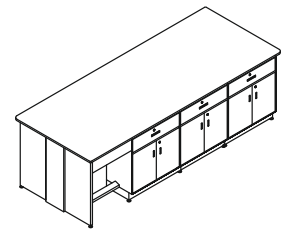
Island or Center Lab Table

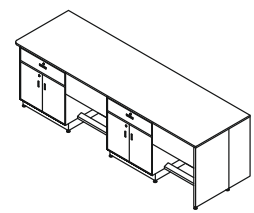
Wall Side Lab Table

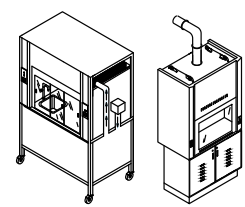
Fume hoods

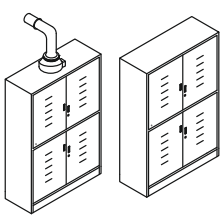
Storage Cupboards

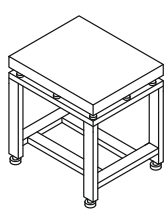
Anti-Vibration Table

Laminar Airflow

Bio-Safety Cabinet

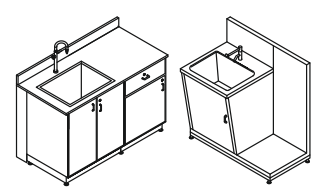
SS Laboratory Furniture

www.metrolabs.biz

GREETINGS FROM METROLABS!

METROLABS
Lab Furniture | Fume Hood | Anti-Vibration Table | Laminar Air Flow
We are there when you need us !

Dear Madam / Sir,

Thank you very much for going through our catalogue. We are honoured that you are interested in learning more about us.

We are here to make your dream lab a reality.

We are going to guide you here, step by step, on the complete method of establishing a new lab for your organisation.

We request you to go through our catalogue, page by page, as this will help you achieve the laboratory you have envisioned.

We are there when you need us !

Our best wishes,
Team Metrolabs

LABORATORY FURNITURE AND WORKSTATIONS FOR

Pharma lab
Food Analytical Lab
Hospital and Diagnostics Lab
Flavours And Fragrances Lab
Automobile Lab
Paint Lab
Electronics Lab
Chemical & Plastic Lab
Petroleum Refinery Lab
Space Science Lab
Veterinary Science Lab
Animal health Lab
Aerospace Lab
Nuclear Power Lab
Atomic Research Lab
Agricultural Lab
Textiles Testing Lab
Commercial Testing Lab
Academic Science Lab
Research Institute Lab

metrolabs1@gmail.com

LAB PLAN MODEL

METROLABS
Lab Furniture | Fume Hood | Anti-Vibration Table | Laminar Air Flow
We are there when you need us !

Provide to us

⇒ A straightforward hand-drawn sketch of your laboratory, including the following features.

⇒ Accurate dimensions and the positions of doors and permanent fixtures.

⇒ The dimensions of the lab furniture that you need.

⇒ The specific facilities or features that you require in the lab furniture like sinks, electrical sockets, gas valves, etc.

Hand sketch of the required lab

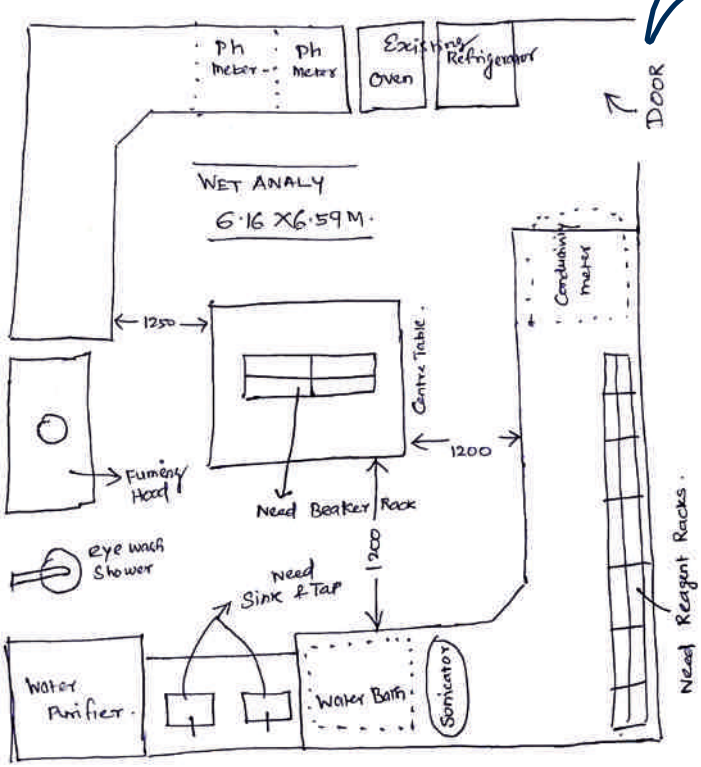

Metrolabs CAD plan

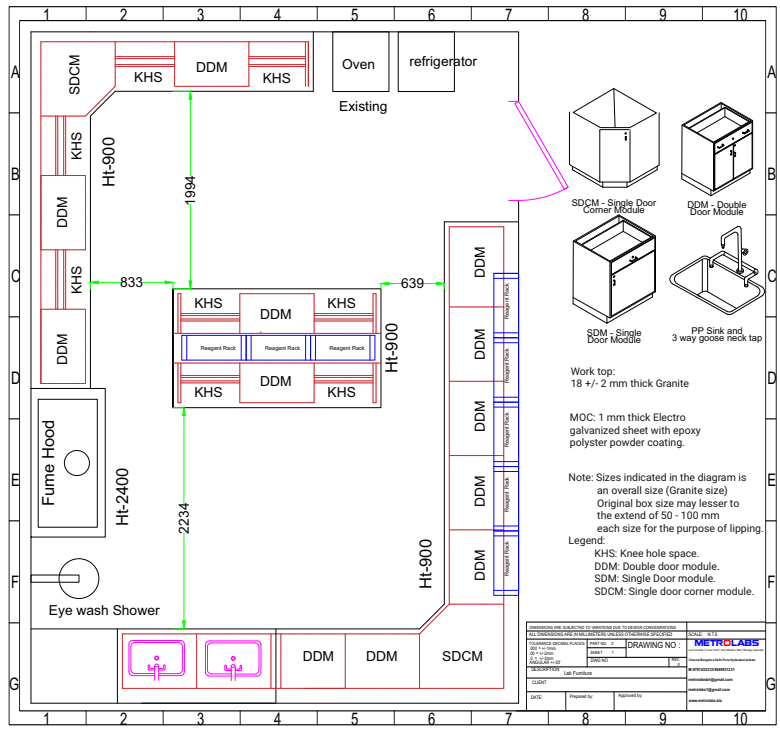

We provide to you

⇒ Precise and meticulous drawings tailored to your ideas and specific requirements.

⇒ Detailed 2D and 3D renderings to visually showcase the design.

⇒ Robust and long-lasting laboratory furniture of exceptional quality on time.

⇒ Unparalleled after-sales service and maintenance for your product throughout it's lifetime.

PLAN YOUR LAB

98409 31231 / 33
metrolabs1@gmail.com

Prepare a layout of the laboratory

Attach plumbing and electrical plan drawings

Access the guidelines for laboratory from the concerned regulatory body

List down the number of persons per batch and type of lab test planned

Mention any special requirements needed for the laboratory and e-mail everything to us

Submission of lab plan drawing as per your requirements by Metrolabs

Derivation of the final drawing based on your needs and inputs

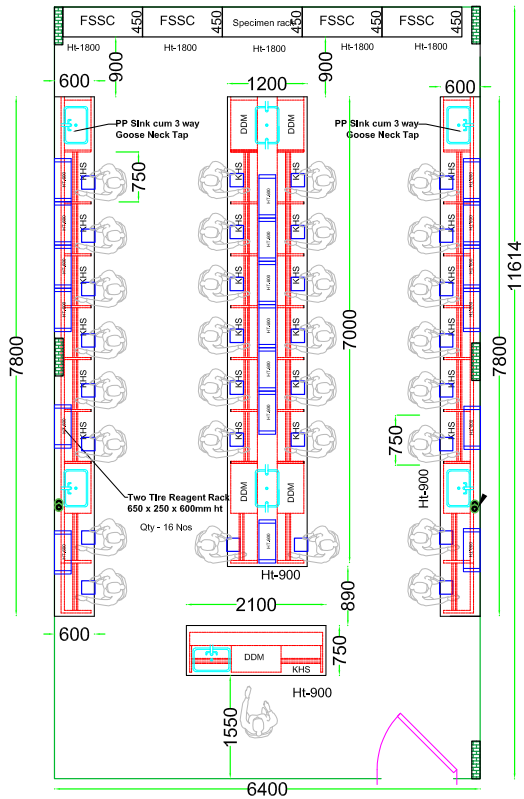

Project Completion

Metrolabs: Installation

Metrolabs: Supply

Metrolabs: Manufacturing

Your Purchase order with color confirmation and advance payment

Your final approval along with color confirmation

Submission of final drawing as per your instructions & Price quotations with terms and conditions

CERTIFICATIONS

Bluestar
Management Systems Pvt. Ltd.
Providing Value Added Services

Certificate of Registration

This is to certify that the
Quality Management System of

METROLABS

TS-04, Micro Industrial Estate, SIDCO Thirumudivakkam, Chennai-600 044, Tamil Nadu, India.

has been assessed and found to comply with the requirements of Documentation of:

ISO 9001:2015

for the following activities

DESIGN, MANUFACTURING, SUPPLY & INSTALLATION OF LABORATORY FURNITURE, FUME HOOD, LAMINAR AIRFLOW, BIOSAFETY CABINETS, STORAGE CABINETS, ANTI-VIBRATION TABLE, METAL DOORS & MODULAR STEEL KITCHEN.

Certificate Number : 10312-QMS-1312

Original Certification Date : 18/03/2021
Revised Certification Date : *N. A.*
Certificate Expiration Date : 17/03/2024

1st Surveillance Due on : 17/03/2022 Done on: *Not Yet Due*
2nd Surveillance Due on: 16/03/2023 Done on: *Not Yet Due*

As per the rules of ISO it is mandatory to get both 1st & 2nd surveillance audits done at least 30 days before the due date. If surveillance audit is not done till due date of both "1 & 2 SURVEILLANCE DUE DATES" then this certificate shall become invalid on the due date. The client should send a proposed date for each surveillance audit at least 15 days before the due date at the email given below.

ORIGINAL CERTIFICATE

United Accreditation Foundation
United States of America
UAF is Full Member of International Accreditation Forum (IAF)

Certification Manager

The validity of this certificate is contingent upon the condition that the client has understood & agreed and shall abide by contract agreement, certification agreement, Master agreement for certification services and logo rules as given on our website www.bluestarmspl.com. It applies only to the documentation maintained by the client and it does not substitute the design or product testing or examination procedures, what so ever. The certificate remains valid until the manufacturing conditions and the quality systems are not changed. This certificate validity is subject to positive results of surveillance audit. The client is requested to check the above certificate details at our above mentioned website by entering their certificate number and inform us in case of any discrepancy at our above email id.

Bluestar Management Systems Pvt. Ltd.

Website : www.bluestarmspl.com
Email : bluestarmspl2@gmail.com, contact@bluestarmspl.com, info@bluestarmspl.com

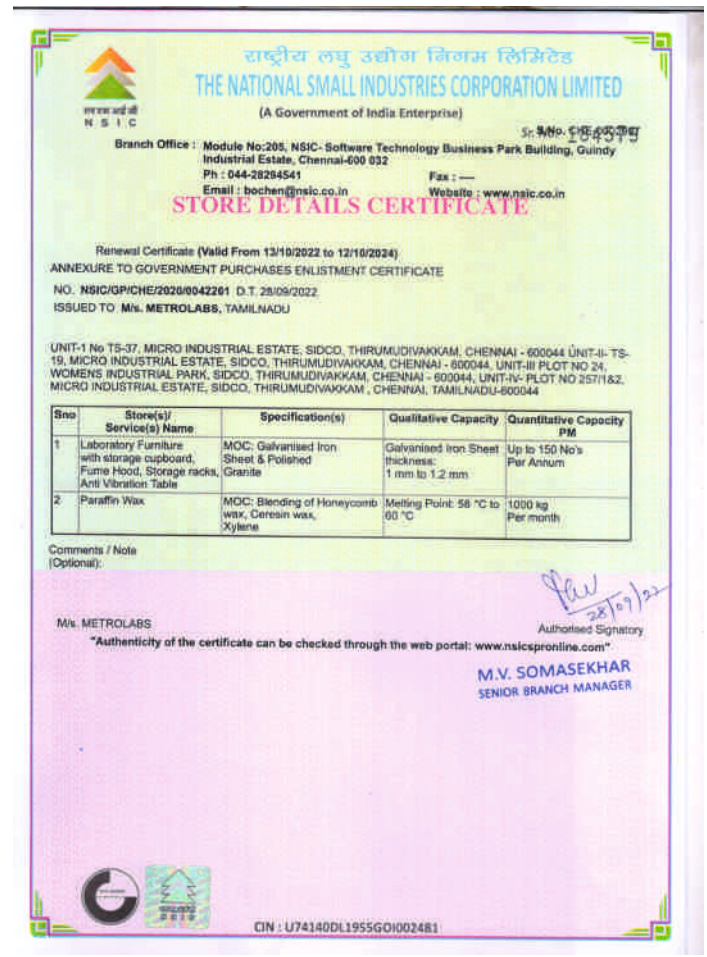

राष्ट्रीय लघु उद्योग निगम लिमिटेड
THE NATIONAL SMALL INDUSTRIES CORPORATION LIMITED
(A Government of India Enterprise)

Sr. No. 154519

Branch Office : Module No:205, NSIC- Software Technology Business Park Building, Guindy Industrial Estate, Chennai-600 032
Ph : 044-28264541 Fax : —
Email : bochen@nsic.co.in Website : www.nsic.co.in

STORE DETAILS CERTIFICATE

Renewal Certificate (Valid From 13/10/2022 to 12/10/2024)
ANNEXURE TO GOVERNMENT PURCHASES ENLISTMENT CERTIFICATE
NO. NSIC/GP/CHE/2020/0042261 D.T. 28/09/2022
ISSUED TO M/s. METROLABS, TAMILNADU

UNIT-1 No TS-37, MICRO INDUSTRIAL ESTATE, SIDCO, THIRUMUDIVAKKAM, CHENNAI - 600044 UNIT-II- TS-19, MICRO INDUSTRIAL ESTATE, SIDCO, THIRUMUDIVAKKAM, CHENNAI - 600044, UNIT-III PLOT NO 24, WOMENS INDUSTRIAL PARK, SIDCO, THIRUMUDIVAKKAM, CHENNAI - 600044, UNIT-IV- PLOT NO 257/1&2, MICRO INDUSTRIAL ESTATE, SIDCO, THIRUMUDIVAKKAM , CHENNAI, TAMILNADU-600044

Sno	Store(s)/ Service(s) Name	Specification(s)	Qualitative Capacity	Quantitative Capacity PM
1	Laboratory Furniture with storage cupboard, Fume Hood, Storage racks, Anti Vibration Table	MOC: Galvanised Iron Sheet & Polished Granite	Galvanised Iron Sheet thickness: 1 mm to 1.2 mm	Up to 150 No's Per Annum
2	Paraffin Wax	MOC: Blending of Honeycomb wax, Ceresin wax, Xylene	Melting Point: 58 °C to 60 °C	1000 kg Per month

Comments / Note (Optional):

28/09/22

M/s. METROLABS
Authorised Signatory

"Authenticity of the certificate can be checked through the web portal: www.nsicspronline.com"

M.V. SOMASEKHAR
SENIOR BRANCH MANAGER

CIN : U74140DL1955GOI002481

Lab Furniture and Fume hoods - as per Standards & guidelines.

ISO

एन एस आई सी
N S I C

GeM
Government
e Marketplace

LAB UNDER BENCH CABINET DETAILS

METROLABS
Lab Furniture | Fume Hood | Anti-Vibration Table | Laminar Air Flow
We are there when you need us !

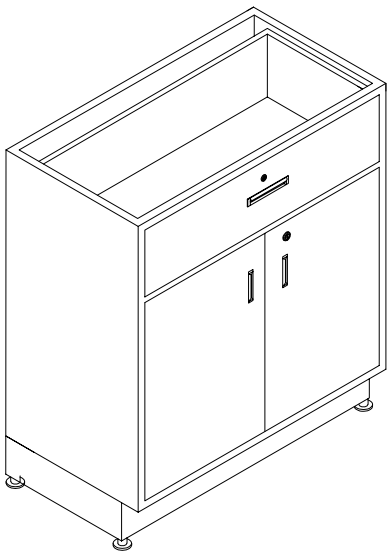

Drawer fitted with
Full extension, ball bearing,
plated drawer slides

Doors and drawers heads are “double pan” construction and sound attenuating.

User friendly branded Cam Lock

Adjustable doors with full
access opening

Aluminum anodized
flush handle

Full depth adjustable shelf,
adjustable on 2" centers

Legend

DDM - Double Door Module;
DDMWW - Double Door Module with wheel;
DDMWG - Double Door Module with glass door;
SDM - Single Door Module;
CSDM - Corner Single Door Module;
WODM - Without draw Module;

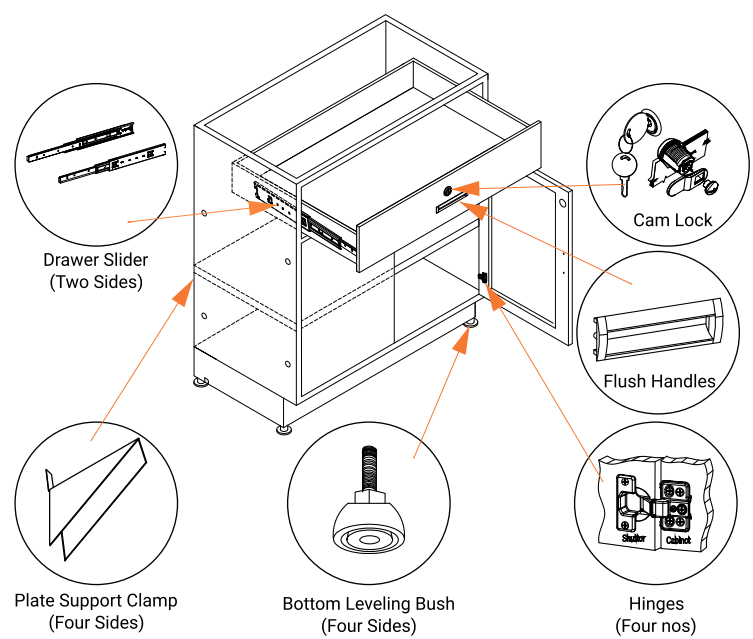

Thickness of base cabinet components
1 or 1.2 mm thick galvanised iron sheets.

Back panels
Bottom panels
Drawer / door outer panels
Door inner panels
Drawer bodies
Bottom
Shelves

All GI sheets are zinc electroplated low carbon steel.
Surfaces finished with powder coated and baked epoxy hybrid powder.
Surfaces are rendered chemical resistant and UV resistant.
Specific test data available on request.

For complete specifications, request our full line of product specifications. Subject to change.

metrolabs1@gmail.com

LAB FURNITURE AND ACCESSORIES SPECIFICATIONS

Table Top

We offer a wide range of countertops such as Epoxy coated black Granite, Epoxy composite, Phenolic resin and Quartz.

Material Used

The under bench modules are made up of Galvanised iron sheets. The frame structures are built using CRCA square /rectangular tubes.

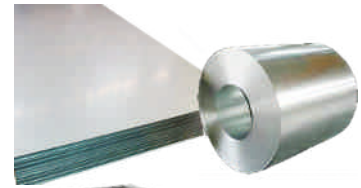

Under Bench Module

The furniture is entirely made of Galvanised Iron (GI) sheets and CRCA tubing. The shutters and drawers are constructed with a sandwich design. To reduce noise when closing them, sound-attenuating polymer bumpers are included. The drawers are equipped with lockable roller bearings to prevent accidental falling. Our robust telescopic drawer slides can support a load of up to 26kg (evenly distributed). All modules come with a default lock and dual key system, which can also be customized according to your needs.

Frame Construction

CRCA Square pipe is used for the main frame structure and bottom support. Welded and finished with chemical-resistant epoxy powder coating.

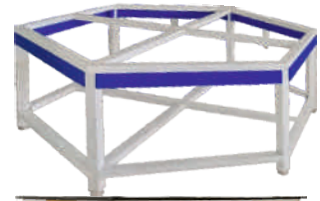

Knee Hole Space

Knee hole space (KHS) is connected through 400 - 750 mm footrest and back panel. Constructed of GI Sheets and finely finished with epoxy powder coating.

Powder Coating

The complete module and frame-work are finished with corrosion-resistant Epoxy-based / Polyester powder coating with 60 ±10 microns thickness.
Laboratory Work Benches are provided with epoxy powder-coated finish, traditionally with half white and optional colour in the both interior and exterior, can be fully customized to express your brand.

LAB FURNITURE AND ACCESSORIES SPECIFICATIONS

Sink and Tap	Polypropylene / Epoxy/ SS / Porcelain sink with outlet waste coupling, without a drain hose. Three way / single way goose neck tap will be provided for each sink.
Pegboards	Laboratory pegboards are available in varied sizes and specifications. Available in both SS and PP.
Reagent Rack	Two tier reagent rack is made of GI Sheet and finely finished with epoxy powder coating.
Electrical switch box	Electrical socket with indicator switch (6/16 - amps) will be mounted on a half or full pyramid structure of powder coated metal GI box.
Fittings	A) Handle : Aluminium anodised Flush handle. B) Screws : All G.I. Visible self drilling screws. C) Lock : Cam lock with dual keys. D) Drawer Slide : Precision full extension ball bearing plated drawer telescopic sliders. E) Hinges: Crank / Butt hinges.
Key Board Tray	Smooth, quiet movement with telescopic slides. Unique arched handrest to prevent fatigue while working. Locks at extended positions completely finished with black epoxy powder coat.
CPU Trolley	Saves valuable desktop space. Soft, vibration reduction pads provided with an adjustment of 95mm with castor wheels. Completely finished with black epoxy powder coating.

SS Peg Board Polypropylene (PP)

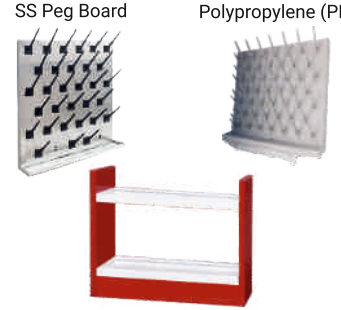

metrolabs1@gmail.com

LAB UNDER BENCH CABINET MODELS

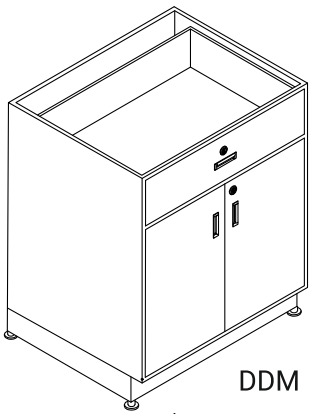

DDM

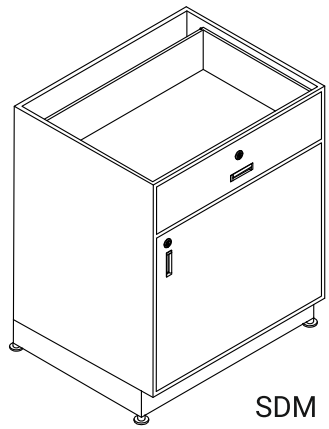

SDM

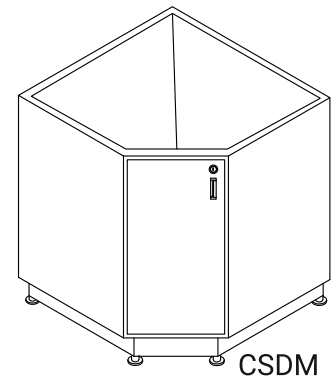

CSDM

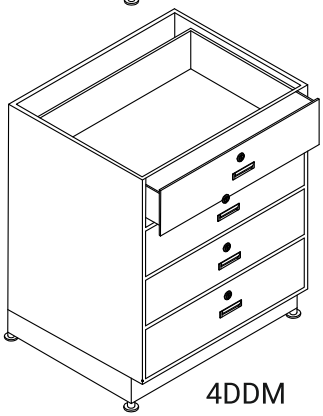

4DDM

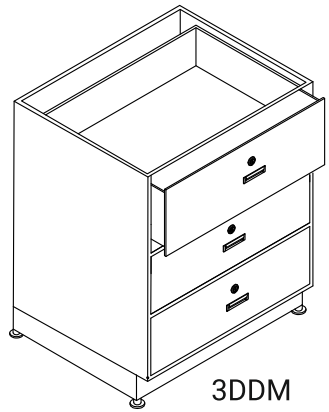

3DDM

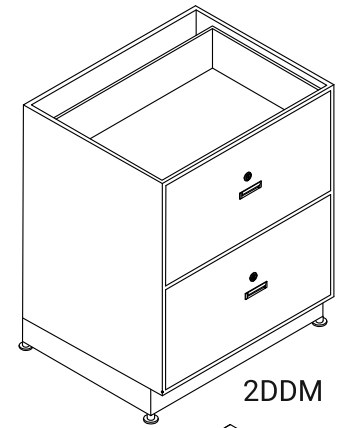

2DDM

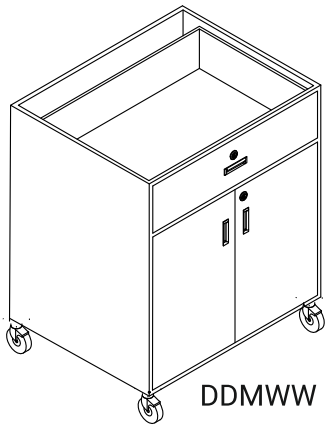

DDMWW

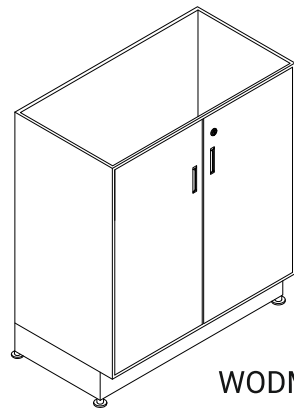

WODM

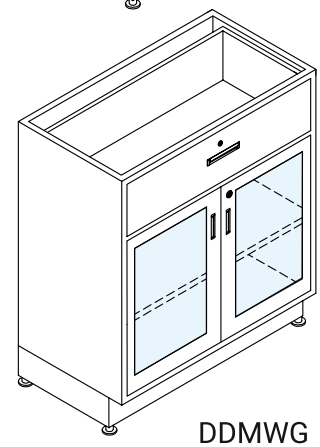

DDMWG

CENTER / ISLAND LAB TABLES

Versatile and space efficient, Centre/Island tables are usually designed to standalone in the central spaces. Intended to incorporate workstations on either side facing each other, they are generally preferred for dry work.

With higher storage spaces, the storage cabinets can be designed to be accessible from both sides. Power sockets, sinks, gas points and reagent racks are provided as per customer requirements for each workstation. The island table can be sized to the lab needs and user ergonomics with knee hole space options or continuous modules.

These lab tables are most optimal when there is a need to incorporate large machinery with a need for 360° operation. Island tables can be designed to perfectly host the machinery while also allowing for all around accessibility.

Benefits:

- Space efficient
- Dual access and larger storage space
- Optimal to incorporate regent racks
- Dismantling and re-assembly is very convenient
- Hassle-free renovation and maintenance
- Instrument placement that is spacious and ergonomic
- 360^0 operation of instruments is most convenient
- Dual access reagent racks, electrical points, sink & taps.

metrolabs1@gmail.com

CENTER / ISLAND LAB TABLES

MIT6432M - (6L x 4W x 3H feet)

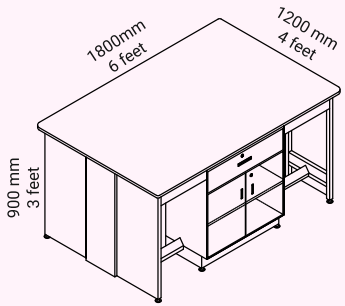

MIT7432M - (7L x 4W x 3H feet)

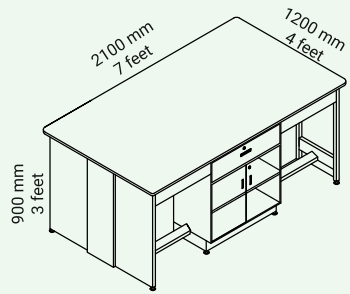

MIT8432M - (8L x 4W x 3H feet)

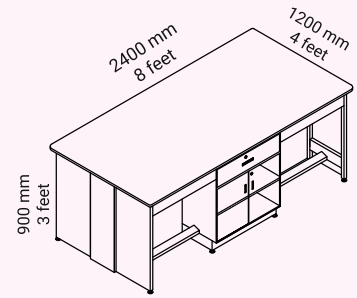

MIT6434M - (6 x 4 x 3 feet)

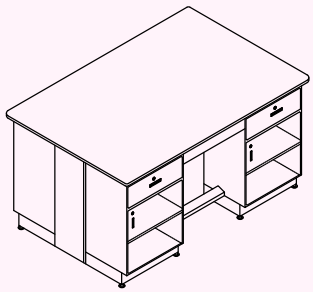

MIT7434M - (7 x 4 x 3 feet)

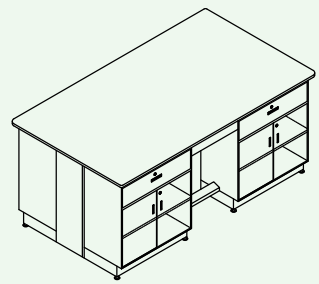

MIT8434M - (8 x 4 x 3 feet)

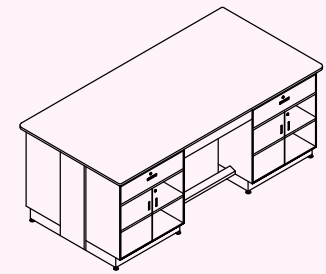

MIT6436M - (6 x 4 x 3 feet)

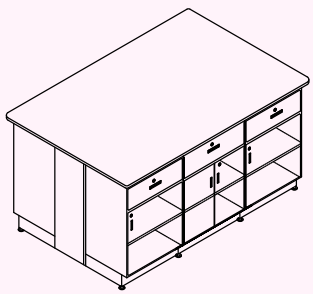

MIT7436M - (7 x 4 x 3 feet)

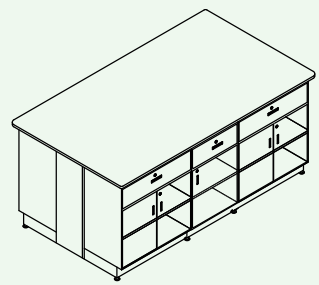

MIT8436M - (8 x 4 x 3 feet)

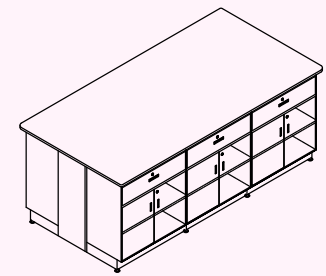

MIT6430M - (6 x 4 x 3 feet)

Ⓐ Ⓑ

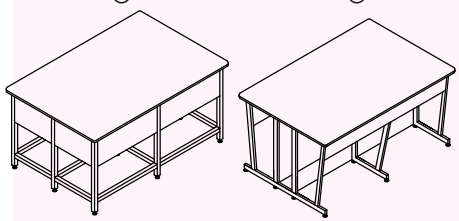

MIT7430M - (7 x 4 x 3 feet)

Ⓐ Ⓑ

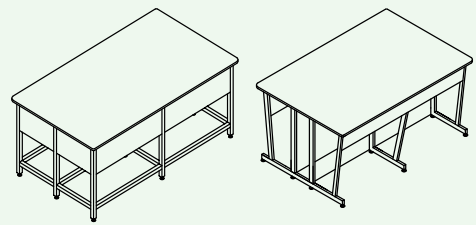

MIT8430M - (8 x 4 x 3 feet)

Ⓐ Ⓑ

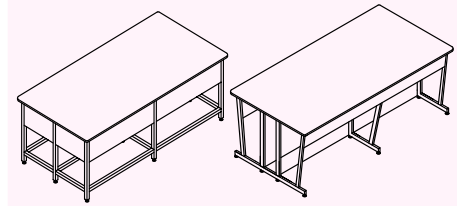

CENTER / ISLAND LAB TABLES

MIT8532M - (8L x 5W x 3H feet)

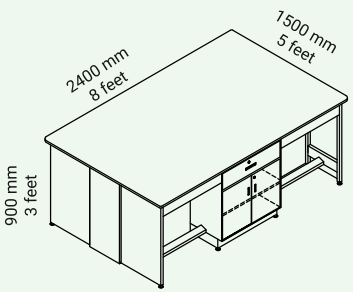

MIT8534M - (8 x 5 x 3 feet)

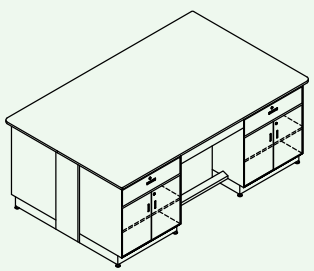

MIT8536M - (8 x 5 x 3 feet)

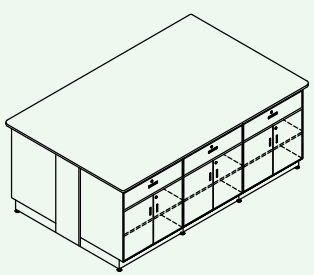

MIT8530M - (8 x 5 x 3 feet)

Ⓐ Ⓑ

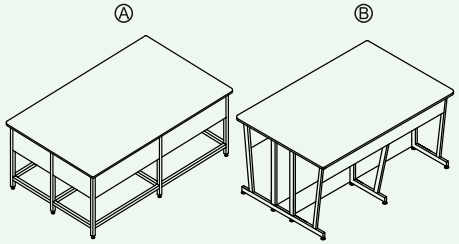

MIT10432M - (10L x 4W x 3H feet)

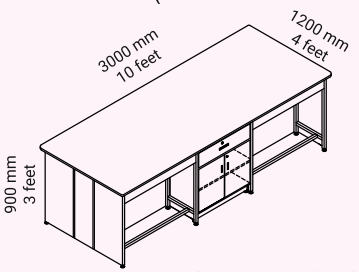

MIT10434M - (10 x 4 x 3 feet)

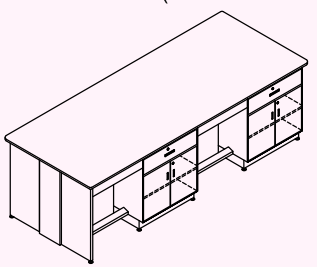

MIT10436M - (10 x 4 x 3 feet)

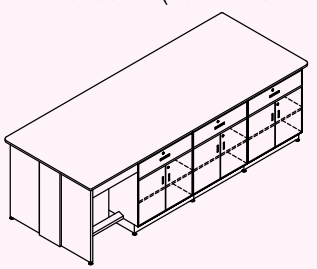

MIT10438M - (10 x 4 x 3 feet)

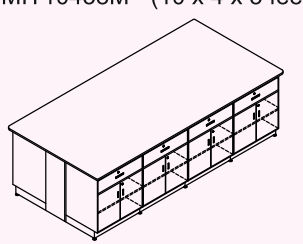

MIT10430M - (10 x 4 x 3 feet)

Ⓐ Ⓑ

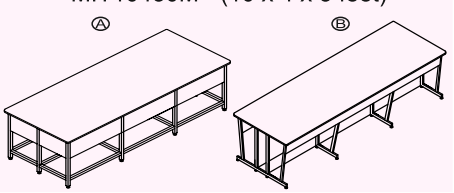

MIT10532M - (10L x 5W x 3H feet)

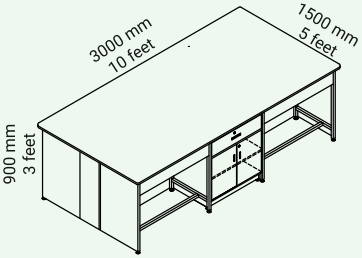

MIT10534M - (10 x 5 x 3 feet)

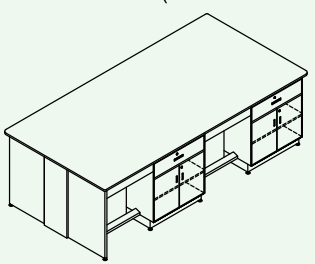

MIT10536M - (10 x 5 x 3 feet)

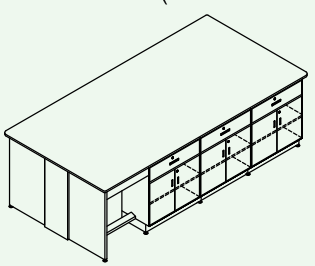

MIT10538M - (10 x 5 x 3 feet)

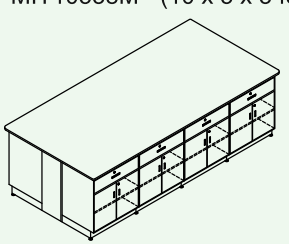

MIT10530M - (10 x 5 x 3 feet)

Ⓐ Ⓑ

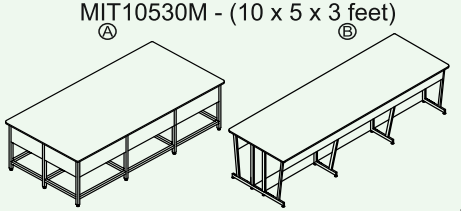

metrolabs1@gmail.com

CENTER / ISLAND LAB TABLES

MIT12434M - (12L x 4W x 3H feet)

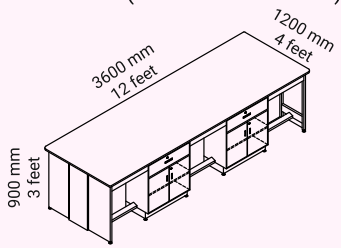

MIT12436M - (12 x 4 x 3 feet)

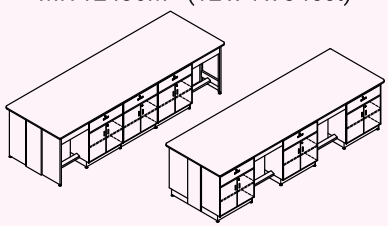

MIT12438M - (12 x 4 x 3 feet)

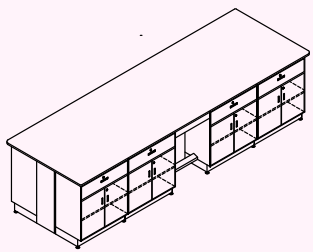

MIT124310M - (12 x 4 x 3 feet)

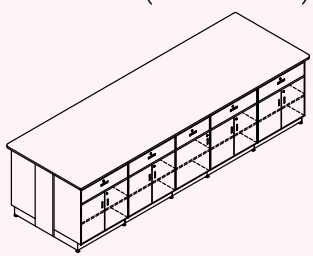

MIT12430M - (12 x 4 x 3 feet)

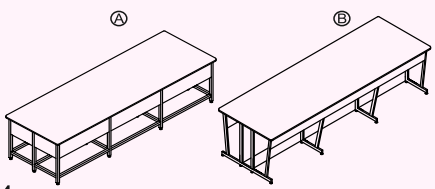

MIT12534M - (12L x 5W x 3H feet)

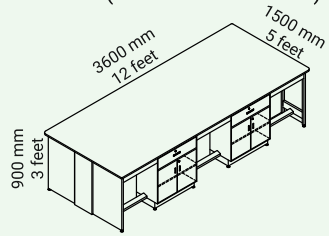

MIT12536M - (12 x 5 x 3 feet)

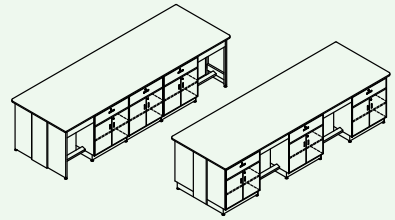

MIT12538M - (12 x 5 x 3 feet)

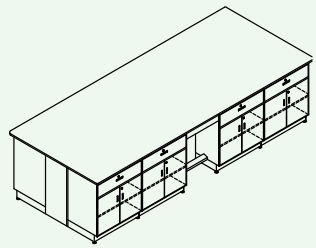

MIT125310M - (12 x 5 x 3 feet)

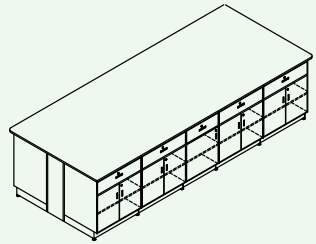

MIT12530M - (12 x 5 x 3 feet)

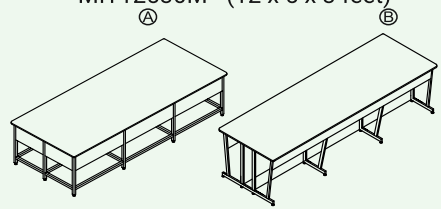

WALL SIDE LAB TABLES

Wall tables are workbenches designed flush against the wall to utilize wall space. They are just wide enough to accommodate workstations on one side. Some industries prefer wall tables for high stakes wet work as the wall acts as an effective backsplash.

Wall tables are often custom designed with sinks at the corners to minimize water splash and maximize accessibility. Laying ducts for spot extractors, electrical lining for sockets, water lines for taps and gas liners for various applications all become much more convenient to construct. Wall tables are preferred when designing with very dense machinery in mind, as their load bearing capacity per unit area is slightly higher.

In many labs, wall tables are integrated with island tables to make a demarcation between dry workstations and wet workstations. For long and narrow lab spaces, wall tables are the best solution as they offer the most functionality for the least spatial width requirement.

Labs performing colorimetric experiments often opt for wall tables as the users have a standard colour comparator background (the wall) across all test results.

Benefits:

- Optimal backsplash
- Ease in incorporating:
  - ⇒ water pipes (Sink-tap assembly)
  - ⇒ ducts (Spot extractors)
  - ⇒ electric lines (Sockets)
  - ⇒ gas pipes for various uses and applications.
- Higher load bearing capacity per unit area
- Denser machinery easily supported
- A better workspace solution for colorimetric experiments
- Convenient spaces for high stakes wet work

metrolabs1@gmail.com

WALL SIDE LAB TABLES

MWT4231M - (4L x 2W x 3H feet)

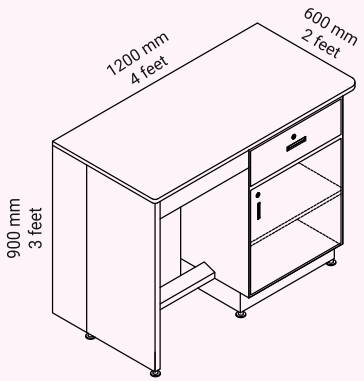

MWT4232M - (4 x 2 x 3 feet)

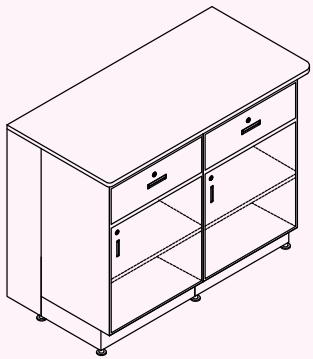

MWT4230M - (4 x 2 x 3 feet)

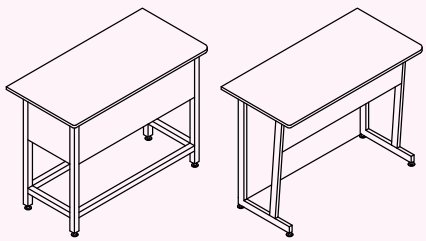

MWT42531M - (4L x 2.5W x 3H feet)

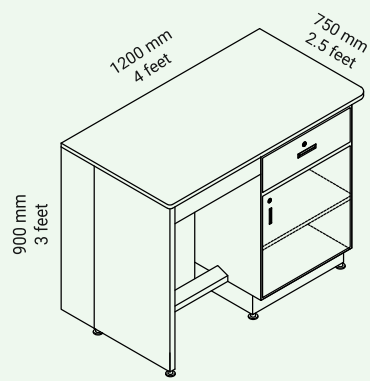

MWT42532M - (4 x 2.5 x 3 feet)

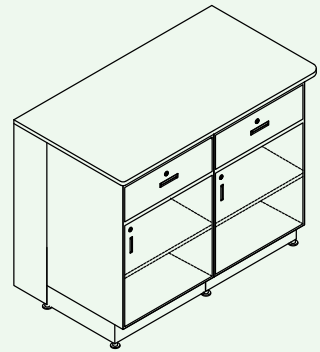

MWT42530M - (4 x 2.5 x 3 feet)

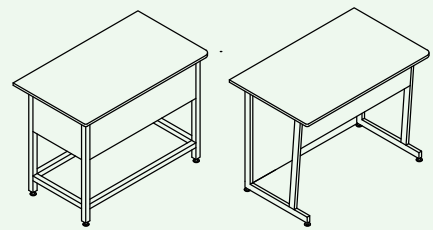

MWT5231M - (5L x 2W x 3H feet)

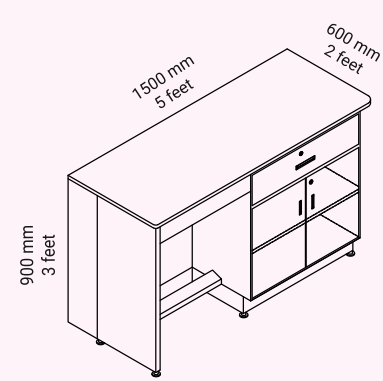

MWT5232M - (5 x 2 x 3 feet)

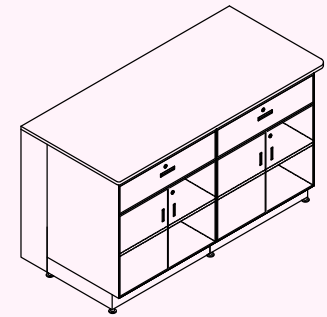

MWT5230M - (5 x 2 x 3 feet)

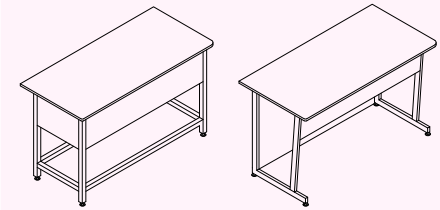

WALL SIDE LAB TABLES

MWT52531M - (5L x 2.5W x 3H feet)

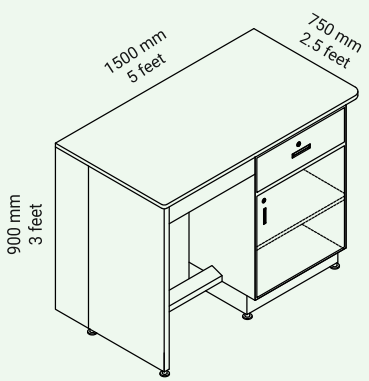

MWT52532M - (5 x 2.5 x 3 feet)

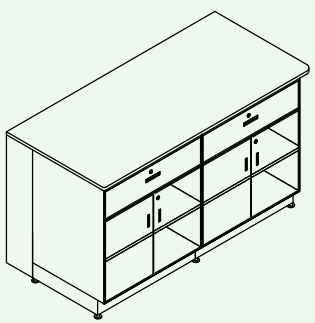

MWT52530M - (5 x 2.5 x 3 feet)

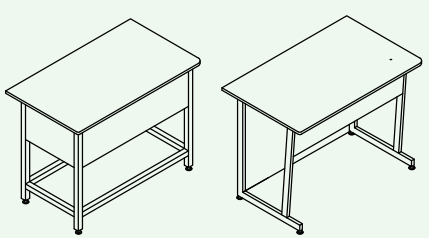

MWT5331M - (5L x 3W x 3H feet)

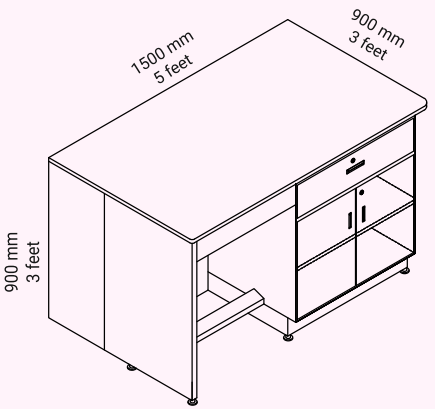

MWT5332M - (5 x 3 x 3 feet)

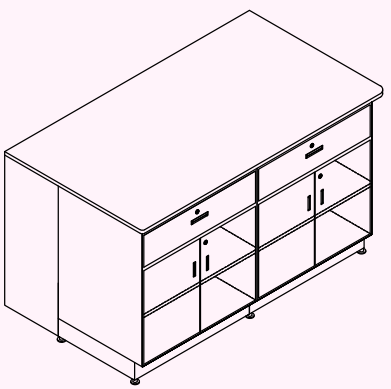

MWT5330M - (5 x 3 x 3 feet)

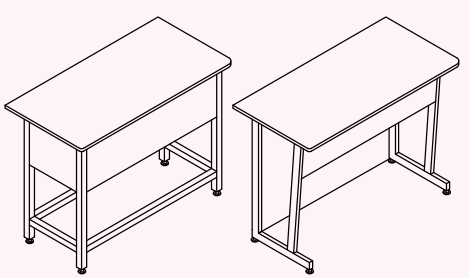

MWT6231M - (6L x 2W x 3H feet)

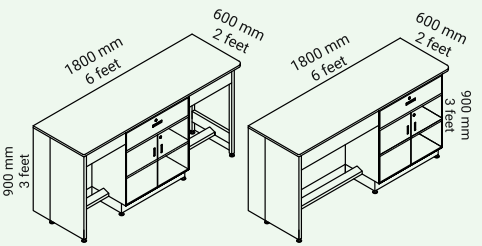

MWT6232M - (6 x 2 x 3 feet)

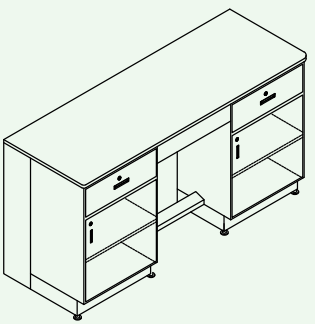

MWT6233M - (6 x 2 x 3 feet)

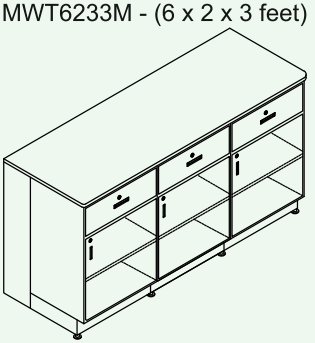

MWT6230M - (6 x 2 x 3 feet)

metrolabs1@gmail.com

WALL SIDE LAB TABLES

MWT62531M - (6L x 2.5W x 3H feet)

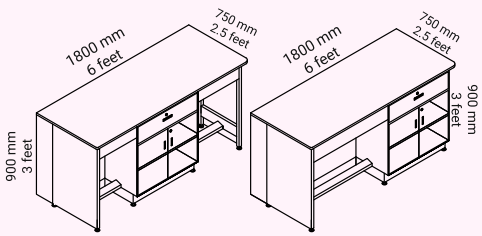

MWT62532M - (6 x 2.5 x 3 feet)

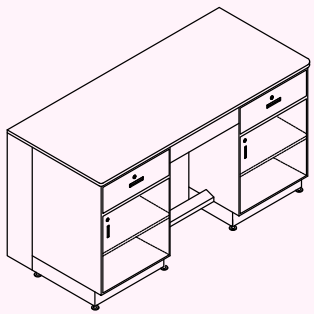

MWT62533M - (6 x 2.5 x 3 feet)

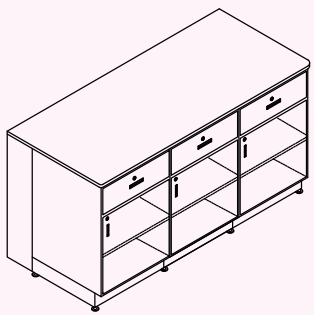

MWT62530M - (6 x 2.5 x 3 feet)

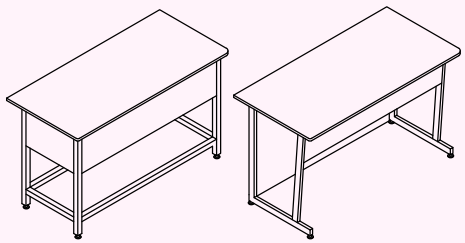

MWT6331M - (6L x 3W x 3H feet)

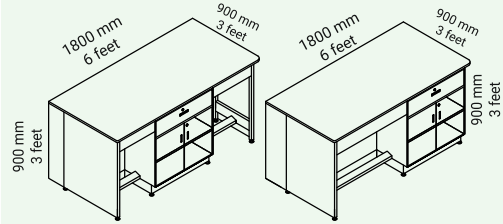

MWT6332M - (6 x 3 x 3 feet)

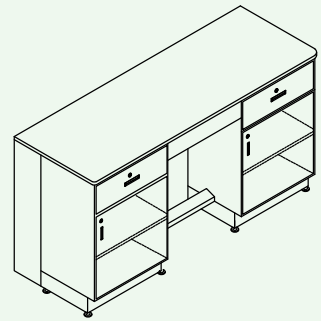

MWT6333M - (6 x 3 x 3 feet)

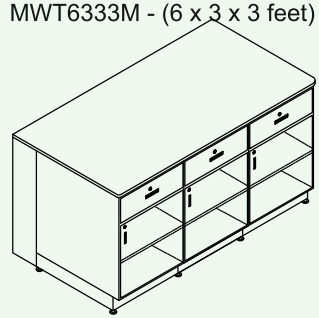

MWT6330M - (6 x 3 x 3 feet)

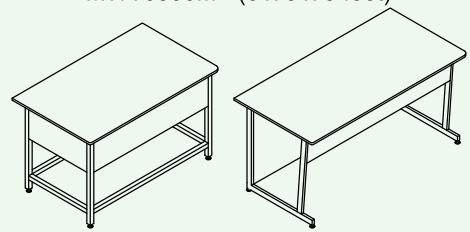

MWT7231M - (7L x 2W x 3H feet)

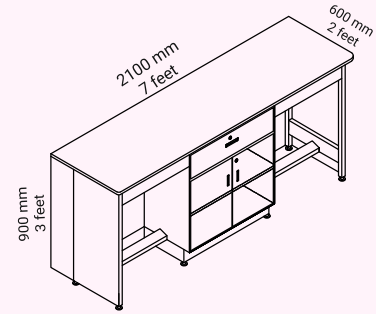

MWT7232M - (7 x 2 x 3 feet)

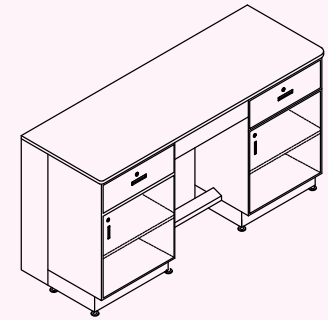

MWT7233M - (7 x 2 x 3 feet)

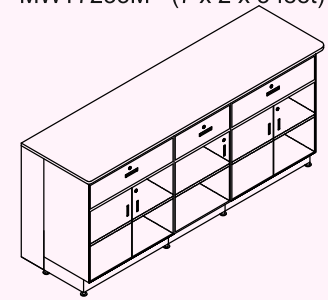

MWT7230M - (7 x 2 x 3 feet)

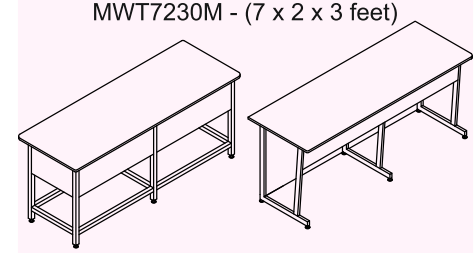

WALL SIDE LAB TABLES

MWT72531M - (7 x 2.5 x 3 feet)

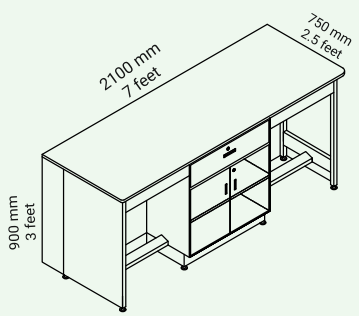

MWT7331M - (7L x 3W x 3H feet)

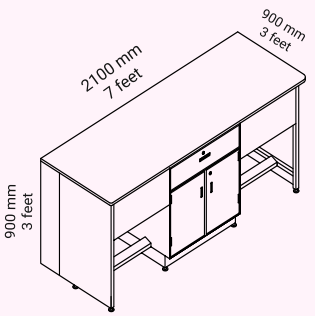

MWT8231M - (8L x 2W x 3H feet)

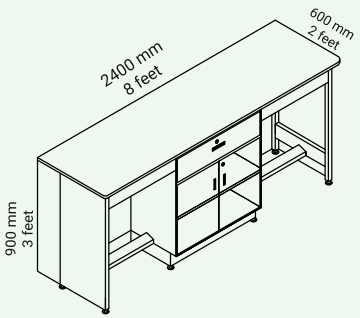

MWT72532M - (7 x 2.5 x 3 feet)

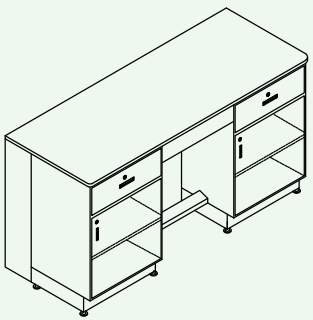

MWT7332M - (7 x 3 x 3 feet)

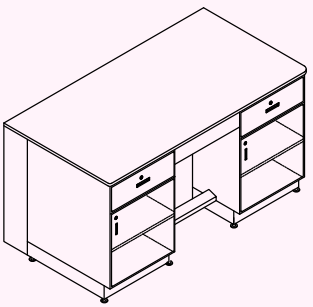

MWT8232M - (8 x 2 x 3 feet)

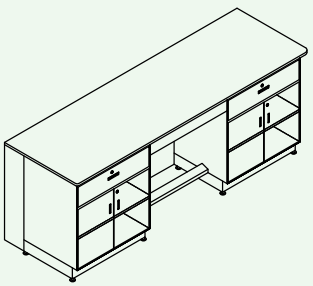

MWT72533M - (7 x 2.5 x 3 feet)

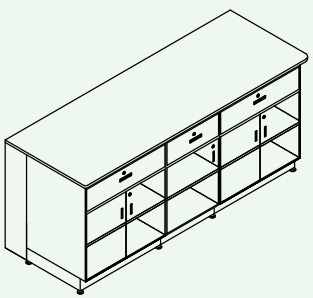

MWT7333M - (7 x 3 x 3 feet)

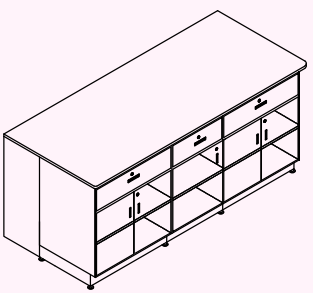

MWT8233M - (8 x 2 x 3 feet)

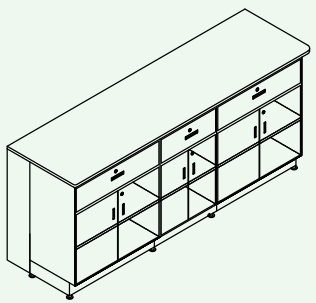

MWT72530M - (7 x 2.5 x 3 feet)

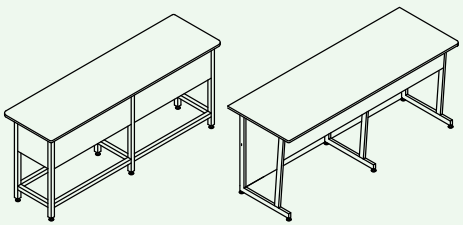

MWT7330M - (7 x 3 x 3 feet)

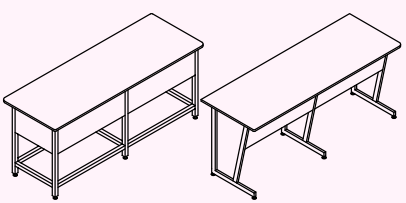

MWT8230M - (8 x 2 x 3 feet)

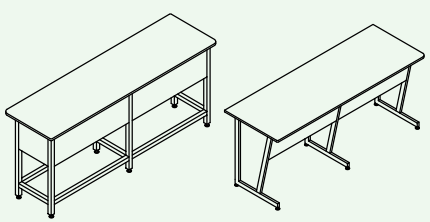

metrolabs1@gmail.com

WALL SIDE LAB TABLES

MWT82531M - (8L x 2.5W x 3H feet)

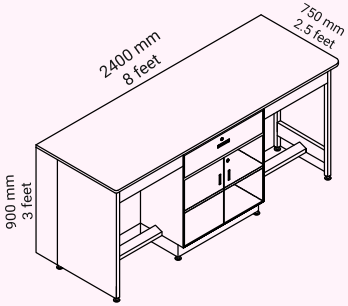

MWT82532M - (8 x 2.5 x 3 feet)

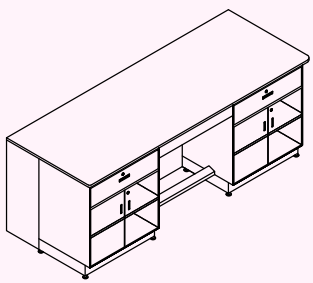

MWT82533M - (8 x 2.5 x 3 feet)

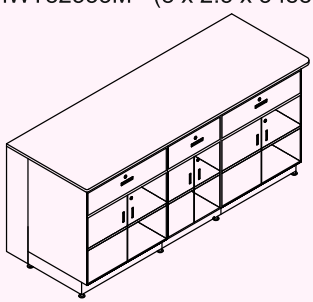

MWT82530M - (8 x 2.5 x 3 feet)

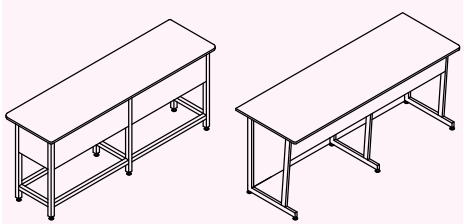

MWT8331M - (8L x 3W x 3H feet)

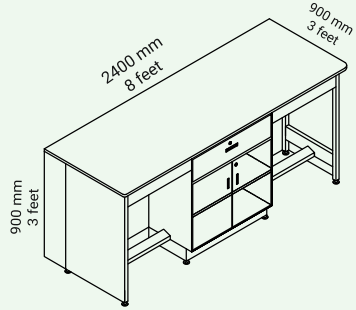

MWT8332M - (8 x 3 x 3 feet)

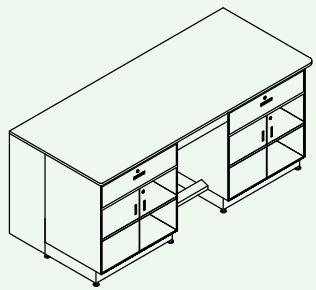

MWT8333M - (8 x 3 x 3 feet)

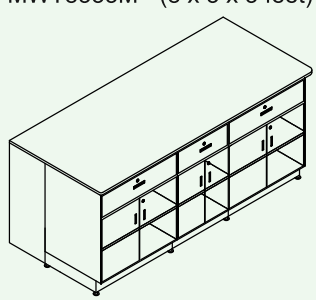

MWT8330M - (8 x 3 x 3 feet)

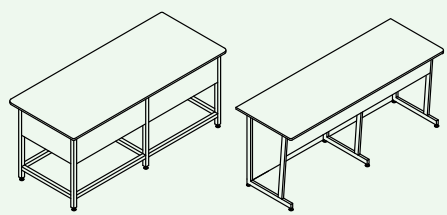

MWT9231M - (9L x 2W x 3H feet)

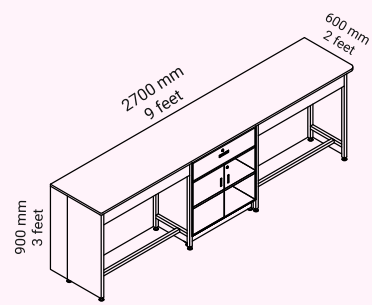

MWT9232M - (9 x 2 x 3 feet)

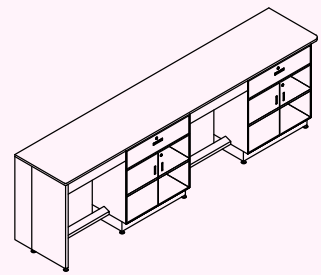

MWT9233M - (9 x 2 x 3 feet)

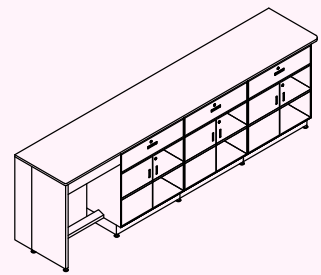

MWT9230M - (9 x 2 x 3 feet)

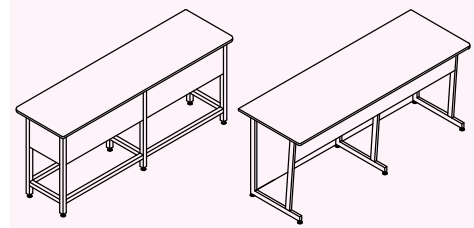

WALL SIDE LAB TABLES

MWT92531M - (9L x 2.5W x 3H feet)

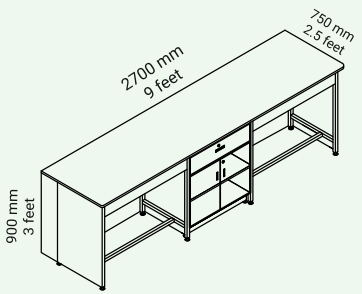

MWT92532M - (9 x 2.5 x 3 feet)

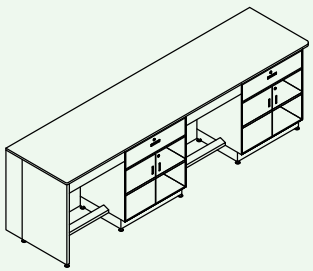

MWT92533M - (9 x 2.5 x 3 feet)

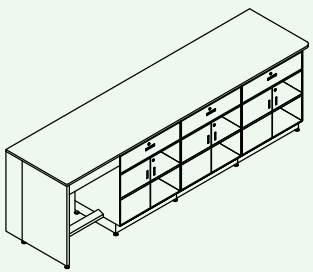

MWT92530M - (9 x 2.5 x 3 feet)

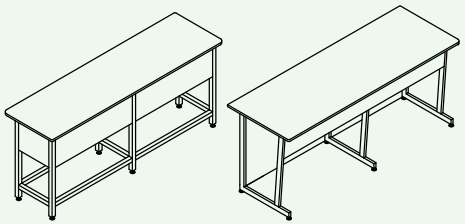

MWT9331M - (9L x 3W x 3H feet)

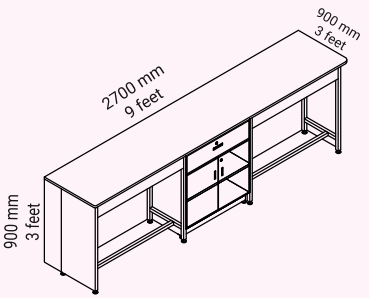

MWT9332M - (9 x 3 x 3 feet)

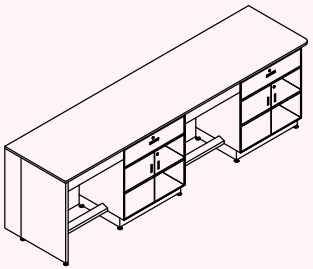

MWT9333M - (9 x 3 x 3 feet)

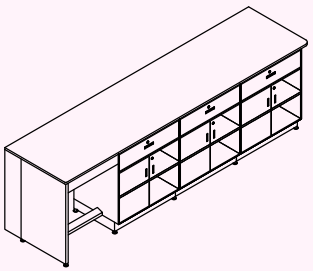

MWT9330M - (9 x 3 x 3 feet)

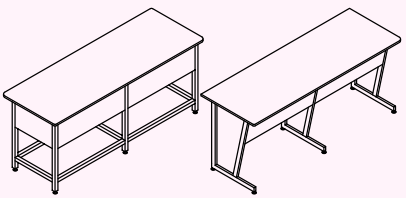

MWT10231M - (10L x 2W x 3H feet)

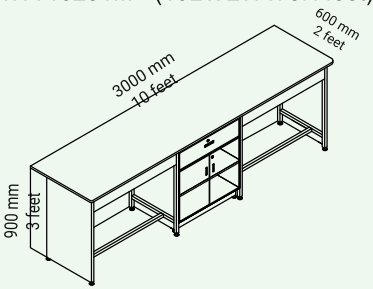

MWT10232M - (10 x 2 x 3 feet)

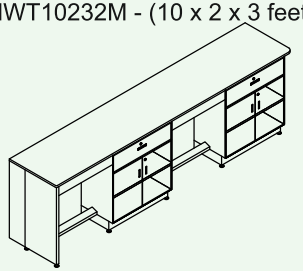

MWT10233M - (10 x 2 x 3 feet)

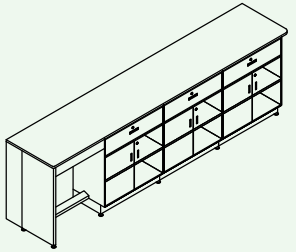

MWT10234M - (10 x 2 x 3 feet)

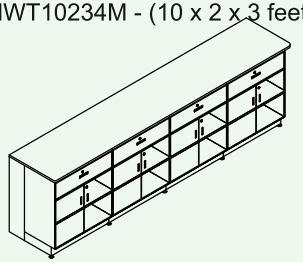

MWT10230M - (10 x 2 x 3 feet)

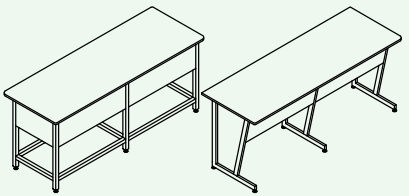

metrolabs1@gmail.com

WALL SIDE LAB TABLES

MWT102531M - (10L x 2.5W x 3H feet)

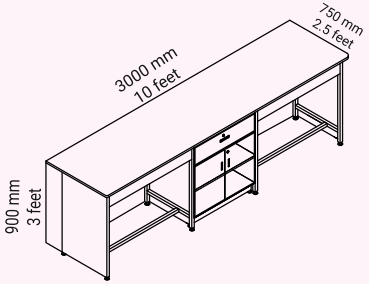

MWT102532M - (10 x 2.5 x 3 feet)

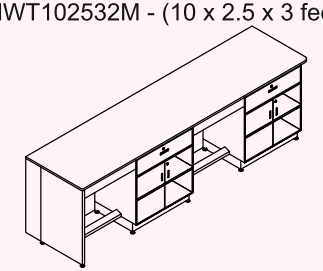

MWT102533M - (10 x 2.5 x 3 feet)

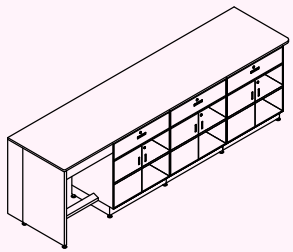

MWT102534M - (10 x 2.5 x 3 feet)

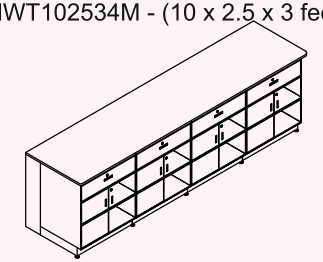

MWT102530M - (10 x 2.5 x 3 feet)

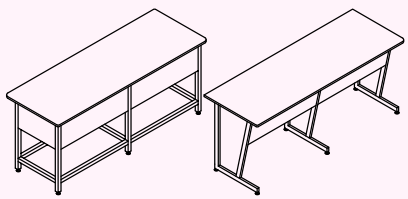

MWT10331M - (10L x 3W x 3H feet)

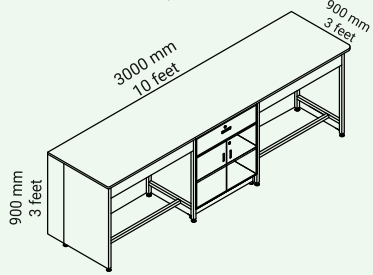

MWT10332M - (10 x 3 x 3 feet)

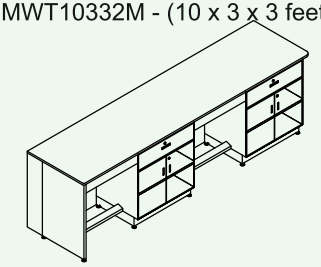

MWT10333M - (10 x 3 x 3 feet)

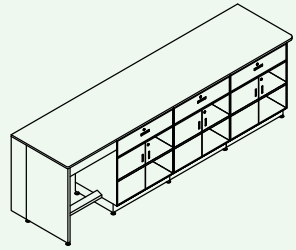

MWT10334M - (10 x 3 x 3 feet)

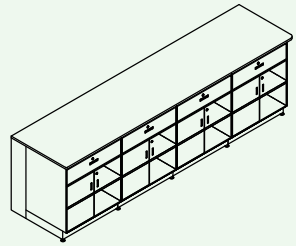

MWT10330M - (10 x 3 x 3 feet)

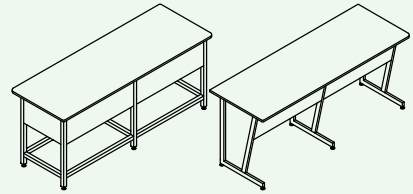

MWT12231M - (12L x 2W x 3H feet)

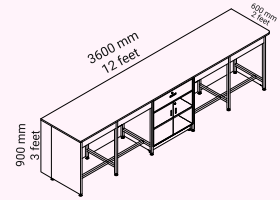

MWT12232M - (12 x 2 x 3 feet)

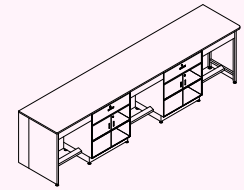

MWT12233M - (12 x 2 x 3 feet)

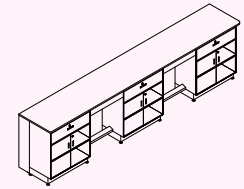

MWT12234M - (12 x 2 x 3 feet)

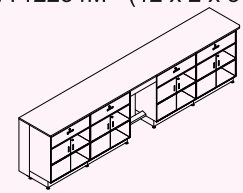

MWT12235M - (12 x 2 x 3 feet)

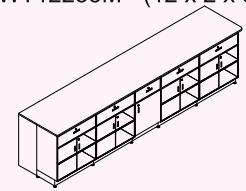

MWT12230M - (12 x 2 x 3 feet)

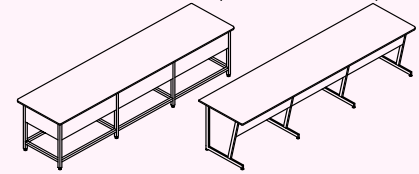

WALL SIDE LAB TABLES

MWT12331M - (12 x 3 x 3 feet)

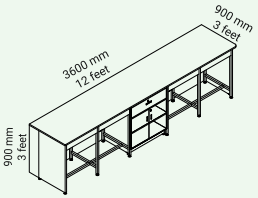

MWT12332M - (12 x 3 x 3 feet)

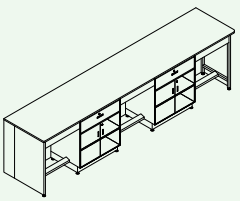

MWT12333M - (12 x 3 x 3 feet)

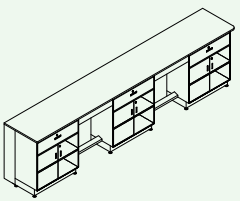

MWT12334M - (12 x 3 x 3 feet)

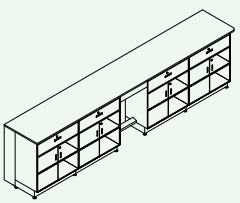

MWT12335M - (12 x 3 x 3 feet)

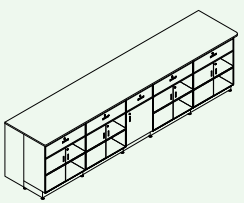

MWT12330M - (12 x 3 x 3 feet)

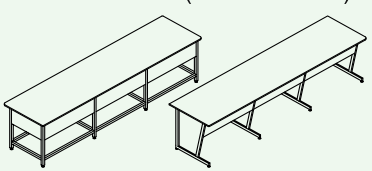

MWT122531M - (12L x 2.5W x 3H feet)

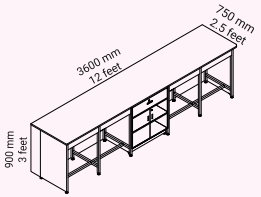

MWT122532M - (12 x 2.5 x 3 feet)

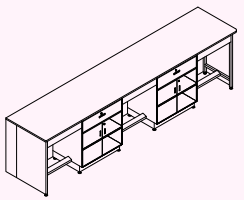

MWT122533M - (12 x 2.5 x 3 feet)

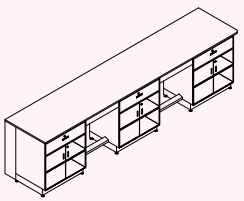

MWT122534M - (12 x 2.5 x 3 feet)

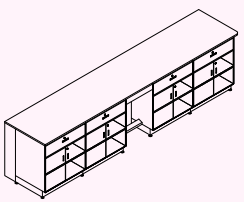

MWT122535M - (12 x 2.5 x 3 feet)

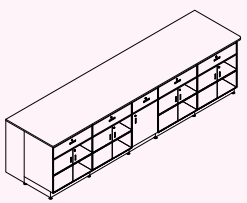

MWT122530M - (12 x 2.5 x 3 feet)

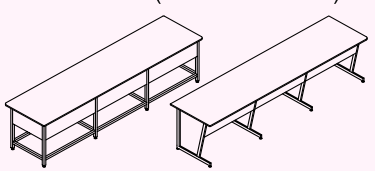

metrolabs1@gmail.com

SINK UNITS

The most important decision while planning for a sink unit is the material of the basin. Choosing the right material of construction assures the safety of operation and extended life of the product. When it comes to the choice of the depth and dimensions of the sink unit, the vessels used in the lab must be considered in order to make the decision.

Materials that we offer:

- ⇒ Polypropylene (PP)
- ⇒ Porcelain
- ⇒ Ceramic
- ⇒ Quartz
- ⇒ Epoxy
- ⇒ Stainless steel

Tap assembly technical specifications:

- ⇒ Porosity and leakage resistance
- ⇒ Made from high-quality brass forging grade IS 8387 2007 and machining grade IS : 319 (I)
- ⇒ Epoxy powder coated
- ⇒ Tested pneumatically at 250 PSI, hydraulically at 30 PSI and Burst Tested at 500 PSI to avoid leakage
- ⇒ Life cycle test of 5,00,000 cycles

SINK UNITS

METROLABS
Lab Furniture | Fume Hood | Anti-Vibration Table | Laminar Air Flow
We are there when you need us !

SINK UNITS

MST32531M - (3L x 2.5W x 3H feet)

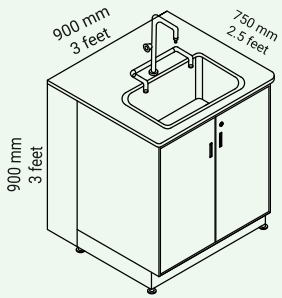

MWT3331M - (3 x 3 x 3 feet)

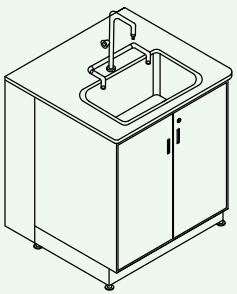

MWT32530M - (3 x 2.5 x 3 feet)

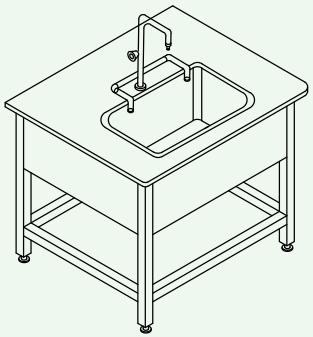

MWT3330M - (3 x 3 x 3 feet)

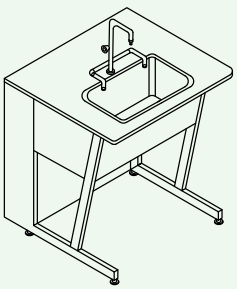

MST52532M - (5L x 2.5W x 3H feet)

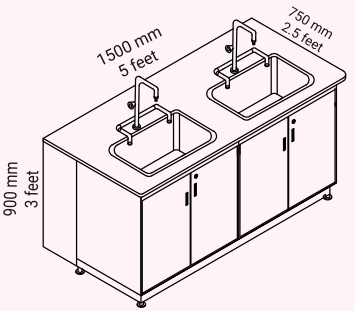

MWT5332M - (5 x 3 x 3 feet)

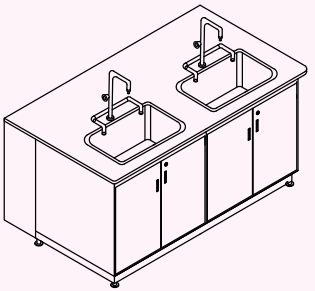

MWT52530M - (5 x 2.5 x 3 feet)

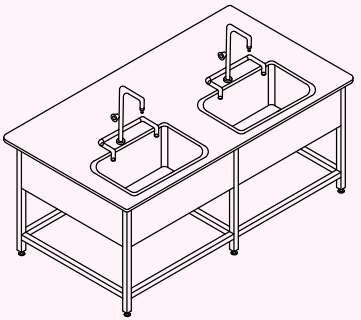

MWT5330M - (5 x 3 x 3 feet)

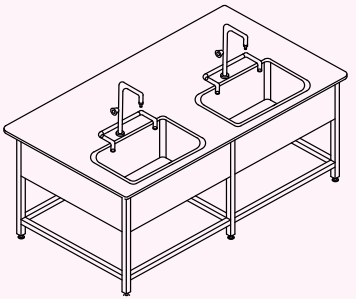

MST52531M - (5L x 2.5W x 3H feet)

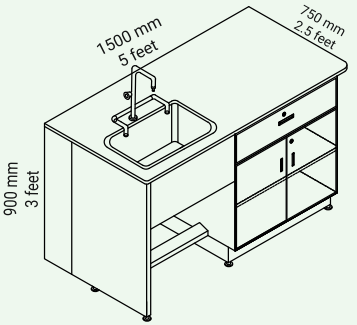

MWT5331M - (5 x 3 x 3 feet)

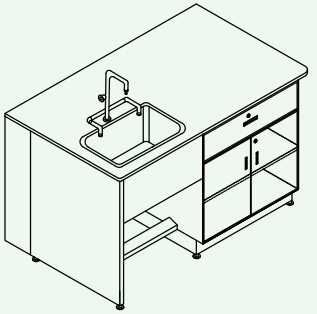

MWT52532M - (5 x 2.5 x 3 feet)

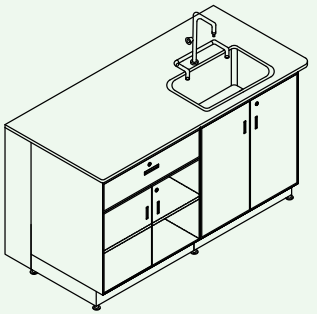

MWT5332M - (5 x 3 x 3 feet)

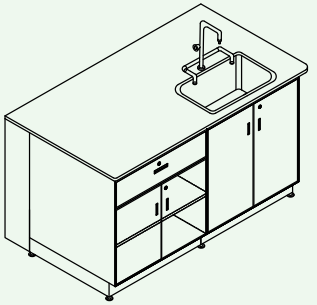

metrolabs1@gmail.com

ANTI-VIBRATION TABLE

Referred to often as AVTs, these are tables that attenuate incoming vibration and provide a suitable worktop for equipment and processes that are highly vibration sensitive. Processes inclusive of but not exclusive to precision metrology, IVF, micro-balances, microscopes, calibration and galvanometers require the use of anti-vibration tables.

The top granite is positioned independently of the bottom frame structure of the table. The heavily weighted tabletop is placed on damping cups that further dampen the vibrations that escape the inertial damping system of the CRCA table frame.

Drawers are added to the design at the request of the customers which provides a space to store weights, accessories and miscellaneous items. The type of attenuation and workspace are customized to best suit the customer's needs.

Structure made of 1mm GI sheets, rectangular CRCA tubing, and finished with epoxy powder coating. In-built Anti-vibration pads and damping mounts. The table is fortified with an inertial system that helps in attenuating deeper vibrations such as that from construction sites, traffic and natural vibrations from earth's crust.

Note: An anti-vibration table is not a vibration-free table, i.e, only the workspace is designed to be low in vibration. It is normal for the table itself to vibrate at times without affecting the functionality of the workspace itself.

- High grade CRCA table frame- Chemical resistant epoxy powder coating.
- High inertial system that dampens maximum vibrations.
- Isolated workspace that attenuates finer vibrations.
- Workspace customised to precisely suit user applications.
- Epoxy powder coated GI drawers can be added to the design.

ANTI-VIBRATION TABLE

MAVT223 - (2L x 2W x 3H feet)
MAVT25253 - (2.5L x 2.5W x 3H feet)
MAVT333 - (3L x 3W x 3H feet)

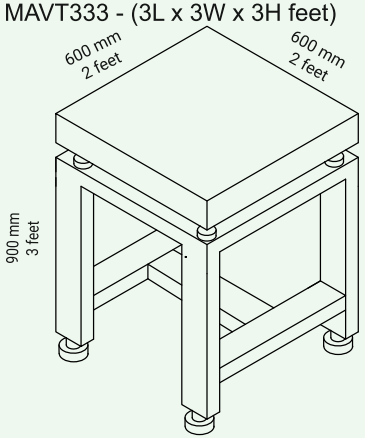

MAVT2253 - (2 x 2.5 x 3 feet)
MAVT2533 - (2.5 x 3 x 3 feet)

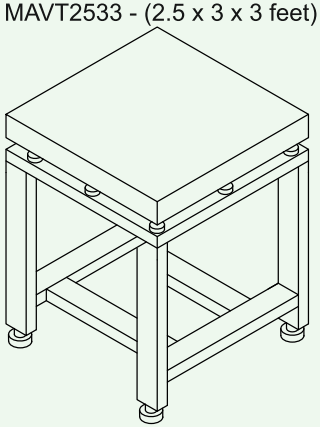

MAVT423 - (4 x 2 x 3 feet)
MAVT4253 - (4 x 2.5 x 3 feet)
MAVT433 - (4 x 3 x 3 feet)

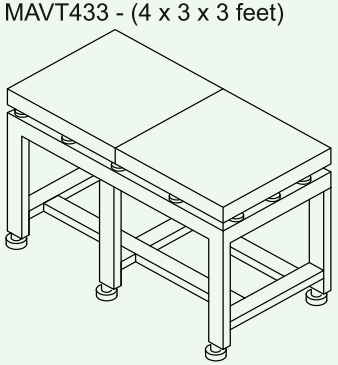

metrolabs1@gmail.com

VIBRATION FREE TABLE

Vibration free tables arrest the vibration that emanates from the table top to the lab floor due to the instrumentation used or processes undertaken. Vibrations are highly disruptive causing a high cost in terms of lab workflow and productivity. VFTs are very useful to seat equipments like GC and HPLC instruments.

Metrolabs Vibration Free tables are excellent in isolating majority of the vibrations emanating from the lab table to the rest of the lab, an excellent tool to operate heavy equipment while retaining a disruption free work environment.

Vibration free tables are an innovative product of Metrolabs, and have been under research and development for over a decade, contributing to a vibration and distraction free workspace.

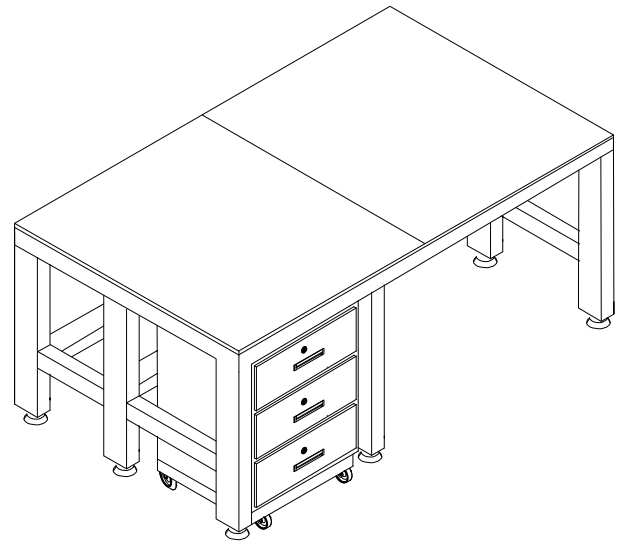

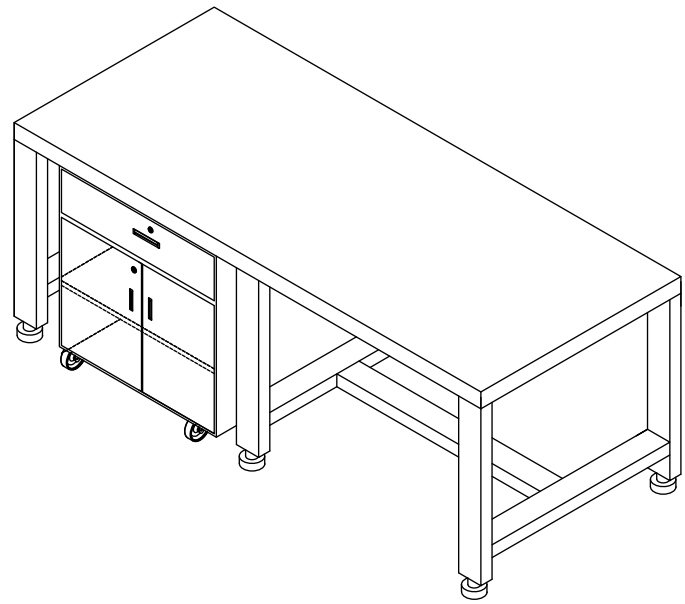

LABORATORY FUME HOODS

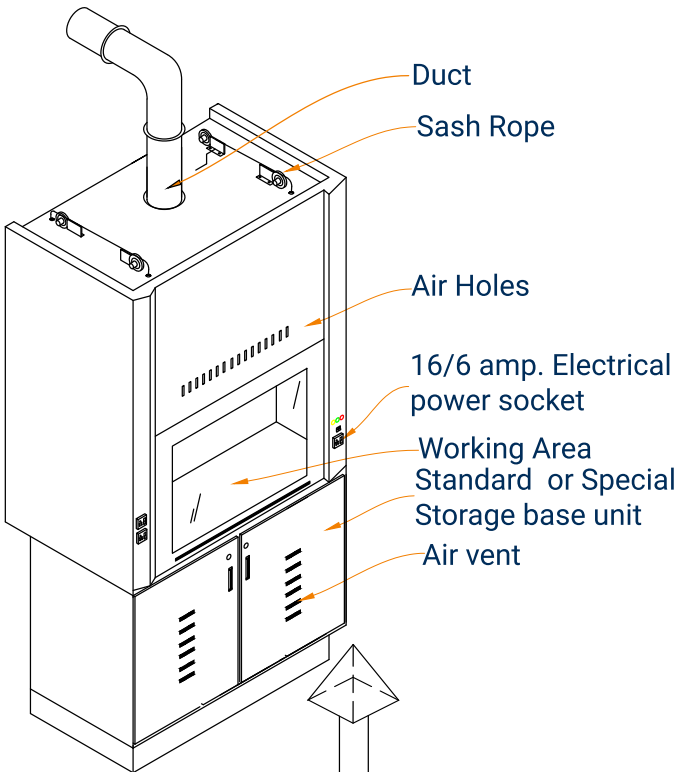

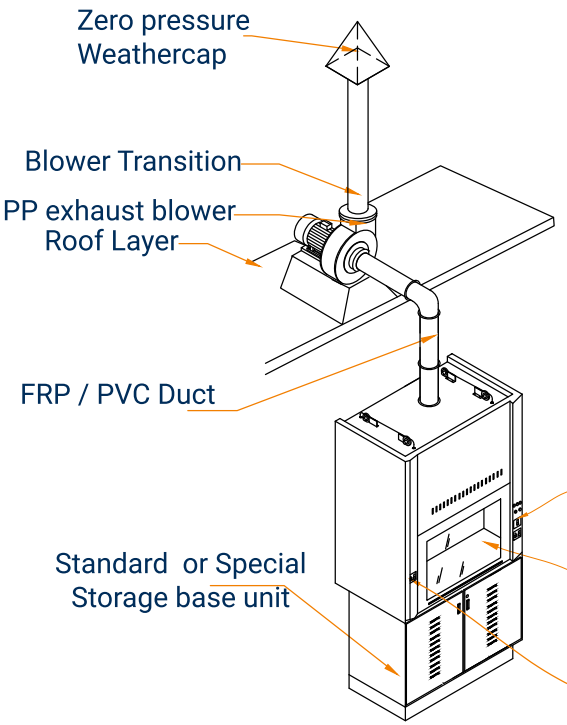

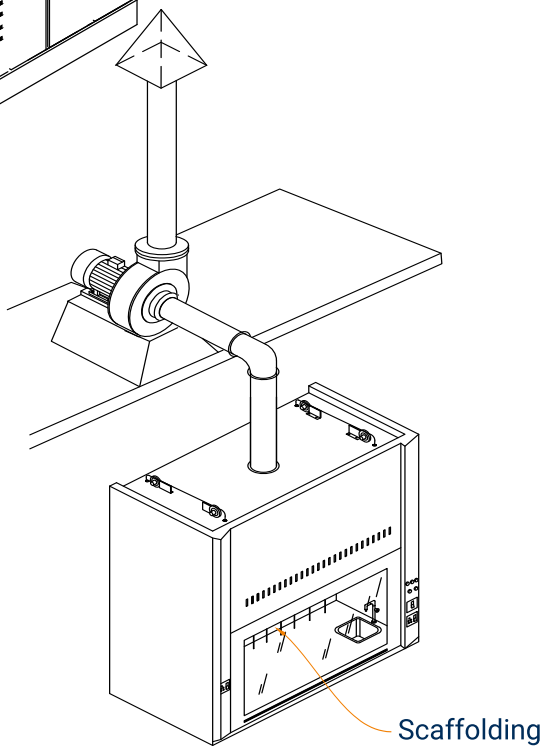

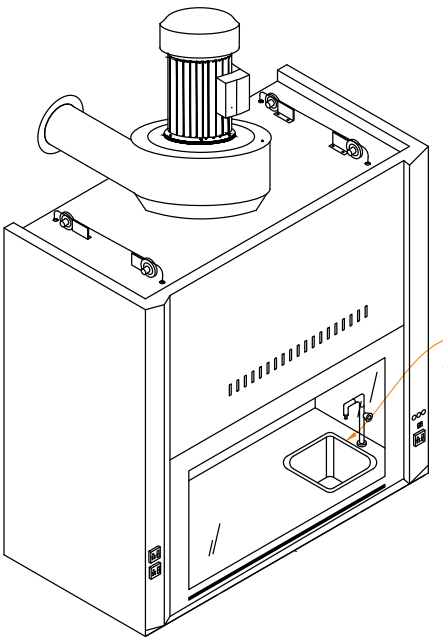

metrolabs1@gmail.com

LABORATORY FUME HOODS

MINI FUME HOOD

MDFH3258 - (3 x 2.5 x 8 feet)
MDFH338 - (3 x 3 x 8 feet)

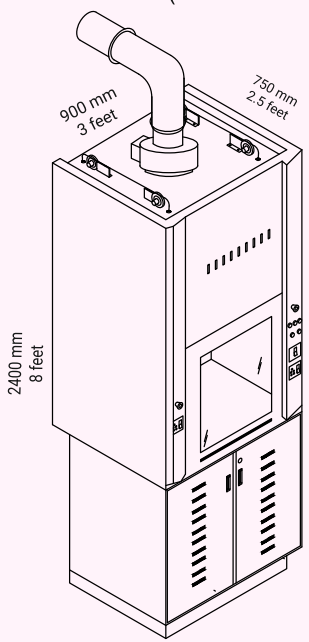

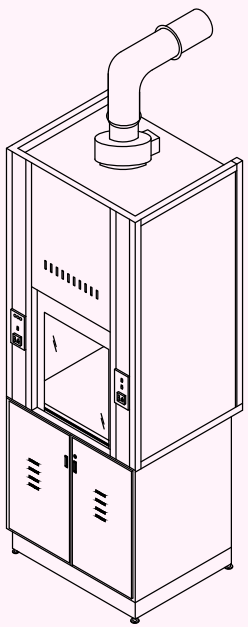

Mini fume hoods are primarily geared towards education, research, and other industries or applications where there is a need for demonstration of the work done, but there is minimal emission of chemicals and vapours generated.

The size of the hood and the inline fan used ensure the right optimum of lower energy consumption while keeping the laboratory air clean and environment friendly.

Featuring glass panels for the sash door and sides. The hood is designed with an ergonomic angle on the front for a good user experience. Alternatively, the back can also be opted for a glass panel to facilitate easy observation of the demonstrations inside the hood.

More suitable for industries where very low amounts of acids are used for testing.

- ⇒ Front side glass panels for sash door.
- ⇒ Ergonomic front angle
- ⇒ Easy demonstration for education and research
- ⇒ Minimal energy usage

LABORATORY FUME HOODS

CHEMICAL FUME HOOD

MDFH4258 - (4 x 2.5 x 8 feet)
MDFH438 - (4 x 3 x 8 feet)

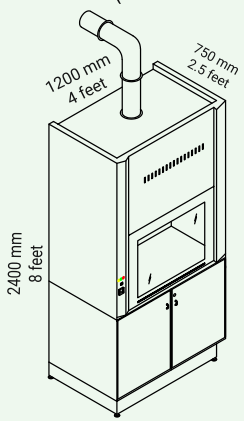

MDFH5258 - (5 x 2.5 x 8 feet)
MDFH538 - (5 x 3 x 8 feet)

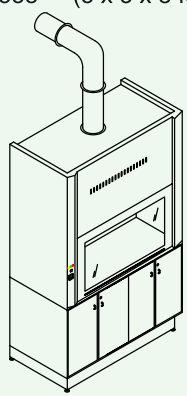

MDFH6258 - (6 x 2.5 x 8 feet)
MDFH638 - (6 x 3 x 8 feet)

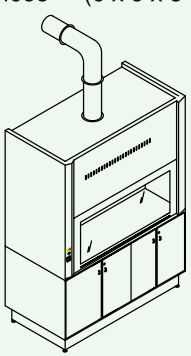

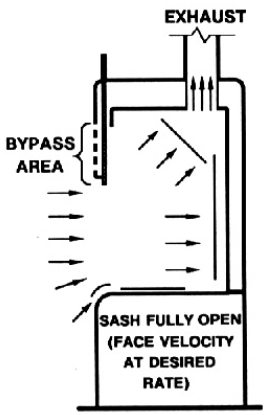

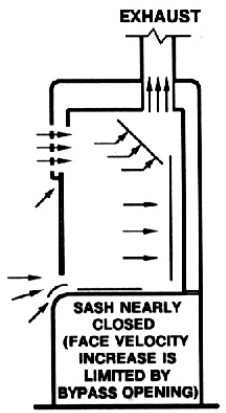

Our chemical fume hoods offer a range of exceptional features and technical specifications that guarantee superior performance. Our fume hoods are equipped with a robust FRP/PP/PRL lining, industry standard blower system, and are accessorized with lights, actuation systems, etc.

Our fume hoods can incorporate customized scrubbing filters tailored to specific applications, ensuring effective containment of hazardous fumes. Opting for our customized scrubbing filters enables customers to generate possibly usable or sellable byproducts, promoting a zero waste process cycle, reducing costs, and benefiting the environment.

In the design process, we place significant emphasis on aerodynamics and real-time factors. Our fume hoods are meticulously designed, in accordance with aerodynamic principles and real-time factors, to optimize airflow patterns and achieve maximum containment efficiency.

We also offer ductless variants. Learn more about this on the next page.

To determine the need for a chemical fume hood, consult the Material Safety Data Sheet (MSDS). Statements such as "Do not breathe dust, fumes, or vapors" or "Toxic by inhalation" in Section 2 of an MSDS highlight the imperative need for a fume hood. By adhering to these guidelines, lab personnel can ensure a safe working environment.

metrolabs1@gmail.com

LABORATORY FUME HOODS

DUCTLESS FUME HOOD

MDLFH3256 - (3 x 2.5 x 6 feet)
MDLFH4256 - (4 x 2.5 x 6 feet)
MDLFH5256 - (5 x 2.5 x 6 feet)

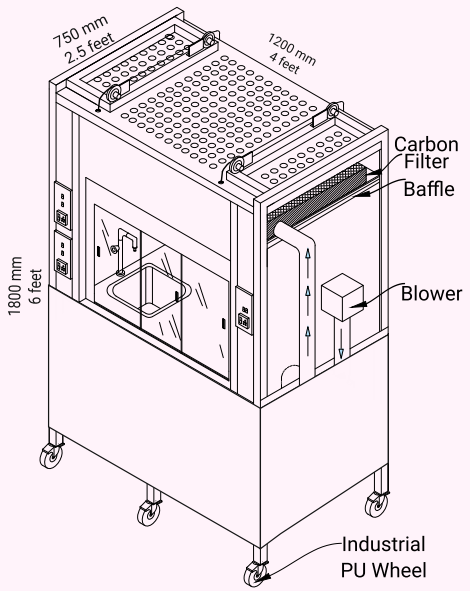

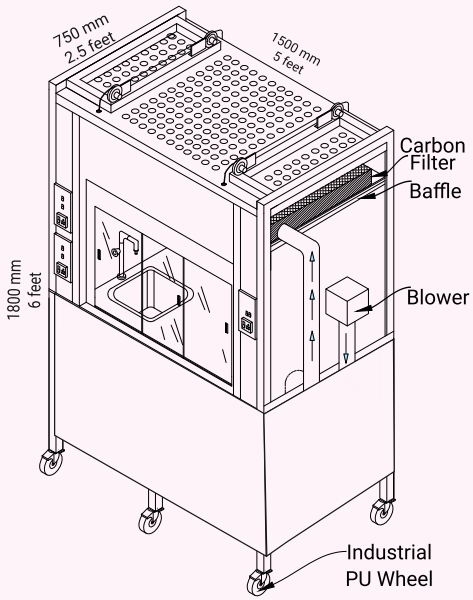

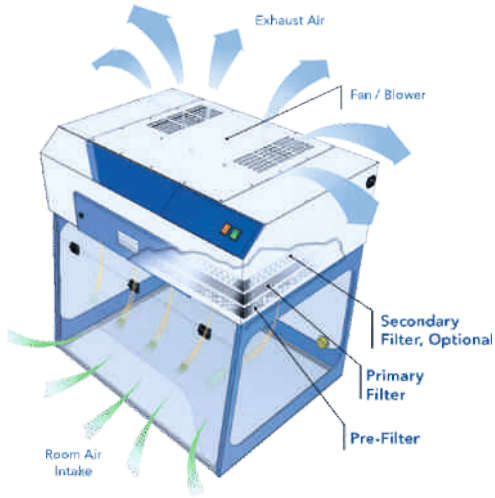

Metrolabs' innovative ductless fume hoods, the perfect solution for medium emission laboratory environments. These self-sufficient systems efficiently collect, scrub, and exhaust worktop air back into the lab atmosphere, eliminating the need for major ducting. It's important to note that the hood lining, accessories, and other features will be customized to suit the customer laboratory environment and processes.

Our eco-engineered scrubbing system effectively traps and isolates chemical vapors, preventing untreated release. We design specific filtration systems to address various different applications precisely, including carbon filters for capturing vapors, organic solvents, acids, and even mercury and formaldehyde.

Installation is a breeze with our ductless fume hoods. They are self-contained units that require no venting to the outside, making them easy to set up and relocate as needed. Their straightforward operation and filter maintenance ensure a hassle-free user experience.

Energy efficiency is another key feature of our ductless fume hoods. By returning clean, filtered air back into the room, they reduce the workload on HVAC systems, resulting in energy savings. Additionally, the elimination of ducting requirements translates into additional cost savings from both construction and HVAC expenses.

LABORATORY FUME HOODS

CANOPY FUME HOOD & SPOT EXTRACTOR

MCFH3215 - (3 x 2 x 1.5 feet)
MCFH4215 - (4 x 2 x 1.5 feet)
MCFH5215 - (5 x 2 x 1.5 feet)
MCFH6215 - (6 x 2 x 1.5 feet)

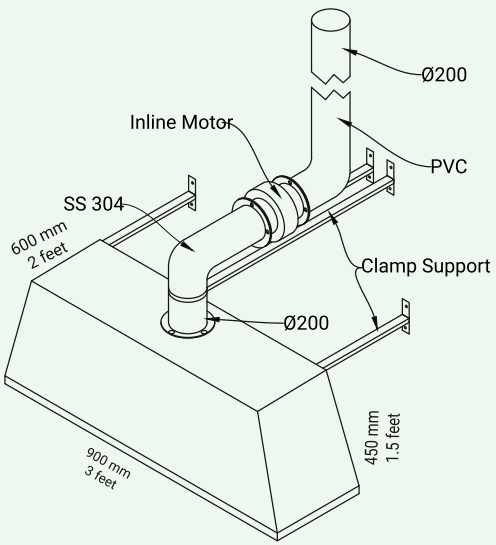

SPE150075 - (1500mm X 75mm)
Wall Mounted / Ceiling Mounted
300mm long / 500mm long / 1000mm long
/ 1200mm long / 1500mm long

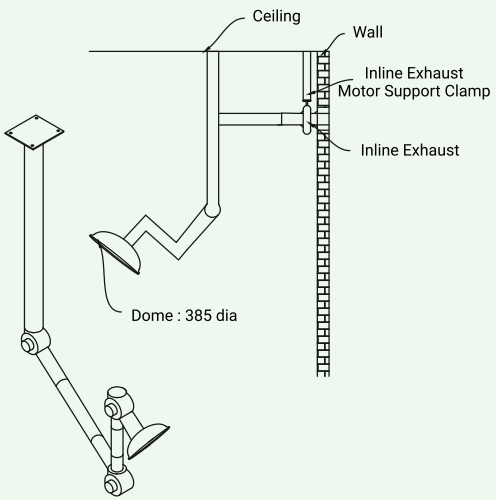

Galvanized Iron
Canopy hood

Stainless Steel
Canopy hood

Extractor Arm
Fume Hood
(Spot Extractor)

Canopy Fume Hoods are designed to vent non-toxic materials such as heat, steam and odors from large or bulky apparatus such as ovens, steam baths and autoclaves. Our canopy hoods are either wall-mounted or suspended from the ceiling; some have a built-in baffle to increase air velocities and enhance the overall capture efficiency. Most canopies are off-white epoxy-coated steel. While there are standard sizes for canopy fume hoods, your hood can be fabricated to your specific size requirements. Metrolabs canopy fume hoods are usually made from epoxy-coated steel, but we can also make them using stainless steel T304 or T316 for more demanding environments.

Extractor Arm Fume Hoods are primarily used for local fumes, odors and air streams. The size of the arm is determined by the airflow that you need. Our extractor arms feature versatile bench, ceiling, or wall mounting capability, so you can place the arm where it suits you best. Available in self-assembly kits, which include a fan, table bracket and connectors, we can also customize to your specific laboratory requirements.

LABORATORY FUME HOODS

WALK-IN FUME HOOD

Floor-mounted or walk-in fume hoods are needed when it comes to protecting users from hazardous gases and vapors generated by large equipment that cannot fit into conventional tabletop fume hoods. These hoods extend to the floor, creating a complete seal for the workspace, and are equipped with counter-weighted sashes for easy one-finger operation.

We take your feedback into account to ensure precise design and engineer to your specific laboratory requirements. Whether you have extensive equipment, drum storage, or work in a dust/particulate producing environment, our walk-in fume hoods are an excellent choice. They provide a secure, reliable environment for your processes while maintaining utmost safety in the lab workspace.

PRODUCT ADVANTAGES

- ⇒ Excellent for labs and workshops with huge equipment, drum storage, and a dust/particulate producing environment.
- ⇒ Can support attachments and devices.
- ⇒ Sashes can be designed to rise vertically or slide horizontally.
- ⇒ The design depends on the hood size and customer requirements.
- ⇒ Allows large equipment or portable workstations to roll in.
- ⇒ High versatility to accommodate different processes.
- ⇒ Isolating the emission workspace within the lab reduces expenses and logistics.

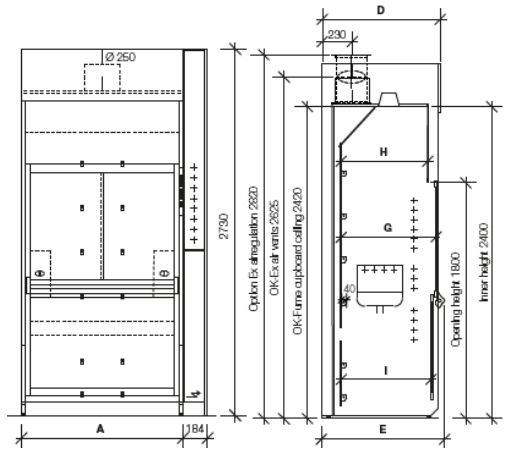

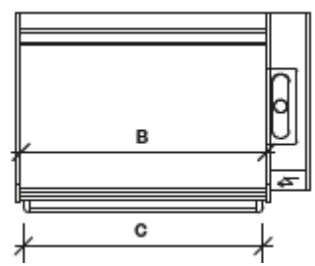

Grid width	A	1200	1500	1800
Interior width	B	1160	1460	1760
Opening Width	C	1140	1440	1740
Fume hood depth	D	910	1070	1270
Total Depth	E	910	1070	1270
Usable depth in area of front Sash	G	710	870	1070
Usable depth in area of skirting	H	650	810	1010
Usable depth in area of telescope sash	I	680	840	1040

LABORATORY FUME HOODS

CONTINUOUS SERIAL FUME HOODS

Serial fume hoods are designed for special applications, where they share ducting and an exhaust motor for fume collection mechanisms. This leads to a reduction in workspace used and energy usage. Caution must be taken while using chemicals in the same series of hoods to prevent cross-reactions inside the ducts and motors.

PRODUCT LAB DESIGN GUIDE

- ⇒ Laboratories with fume hoods should be designed to prevent the re-circulation of air in that lab or any other space, to avoid indoor air quality problems
- ⇒ Fume hoods must be positioned so that individuals entering the lab do not have to pass in front of the hood.
- ⇒ Potentially dangerous parts of experiments are typically carried out in fume hoods. Many lab fires and explosions originate in fume hoods. A fire or explosion in a fume hood positioned next to a path of egress could trap someone in a lab, and turbulence from passing traffic could adversely affect the performance.
- ⇒ The room in which the fume hoods are installed in must have two exist. If this is not possible, the fume hoods must be placed on the side of the room furthest from the door. Note that as per the Fire Code, laboratories larger than 200 ft2 in area must have a second fire exit. In many cases, the exit can be through an adjacent room that then exits to outside or corridor.
- ⇒ All labs with fume hoods must maintain two unblocked routes of egress due to the risk of fire or chemical hazard, both of which often start in a fume hoods and can render an exit impassable.
- ⇒ Fume hoods must not be positioned directly opposite occupied work stations since materials splattered or forced out of a hoods could seriously injure anyone seated across from it.
- ⇒ Windows in labs containing fume hoods must be fixed closed as breezes coming in through the open lab windows can adversely affect the proper functioning of a hoods, and turbulence caused by these wind currents can easily bring the contaminated air inside the hoods out into the lab.

metrolabs1@gmail.com

LABORATORY LAMINAR AIR FLOW

Metrolabs' Laminar Airflow Systems are designed to be work-efficent, energy-efficient, with low noise levels, and are built to last. We understand that every laboratory setting is unique, and that's why we provide a custom design service to meet our customers' specific needs. Our team of experts work closely with you to design a system that is tailored to your specific requirements.

Types of Laminar Airflow Systems:

- ⇒ Horizontal Laminar Airflow Systems: Provides clean air flow over the work area.
- ⇒ Vertical Laminar Airflow Systems: Provides clean air flow from the ceiling to the work-top.

Advantages of our Laminar Airflow Systems:

Reduces the number of microorganisms in the air, providing a sterile environment.- Improves product quality by reducing contamination.- Improves employee safety by reducing exposure to harmful substances.

Standards:

Our laminar airflow systems meet international standards such as ISO 14644, ensuring that they provide the highest level of clean air.

Novel Features:

Customizable dimensions, accessories, features, and materials of construction to meet specific customer needs. HEPA filters that trap even the smallest particles, ensuring clean and sterile air. Energy-efficient designs that save on operational costs.

Our systems can be tailored to specific room sizes, with precise airflow rates, noise levels, and filtration options. We offer add-ons like UV lamps for sterilization, ergonomic workstation height, and sash operation for ease of use. Our experienced team works closely with customers to design a system that fits their specific requirements, ensuring the highest levels of cleanliness, safety, and control. With our tailored solutions, our customers can achieve optimal performance and functionality in their workspace.

LABORATORY BIO-SAFETY CABINET

At Metrolabs, we understand the importance of laboratory safety when working with hazardous biological materials. That's why we are committed to providing the highest quality bio safety cabinets that are custom designed to meet all the specific needs of your laboratory.

Features:

⇒ HEPA filters, negative air pressure, and airflow alarms can be opted for to ensure that harmful particles and microorganisms are contained and do not spread
⇒ Ultraviolet light disinfection decontaminates surfaces in the cabinet, providing an extra layer of protection
⇒ User-friendly and ergonomically designed
⇒ Quiet operation and low vibration, making them ideal for sensitive experiments

Benefits:

⇒ Ensures the safety of laboratory workers and the environment when working with hazardous biological materials
⇒ Reduces the risk of contamination through advanced filtration and decontamination systems
⇒ Increases efficiency and reduces user fatigue with user-friendly and ergonomically designed features
⇒ Provides a quiet and stable working environment for sensitive experiments

SIDE-BY-SIDE BSC CLASS COMPARISON

Classes of Biosafety Cabinets	Personnel Protection	Product Protection	Environmental Protection	Use
Class I	Yes Inward air flow through sash opening	No Unfiltered room air is drawn across work surface	Yes Exhaust air is HEPA-filtered	• Not in use today for bioagents • May be used to enclose equipment or procedures with aerosol potential
Class II A1, A2, B1, B2	Yes Inward air flow through sash opening	Yes By HEPA filtered air drawn down onto work surface & room air kept away	Yes Exhaust air is HEPA-filtered	• *Most common class of BSC used today, esp. Type A2* • Used to handle specimen material, biological toxins, cell tissue culture, biohazardous agents
Class III (Glove Box)	Yes Complete containment of interior work area	Yes HEPA filtered air is supplied to work surface; total containment keeps room air out	Yes Exhaust air is double HEPA-filtered	• Provides the highest level of containment for handling the most dangerous microorganisms

Customized to meet the specific needs of your laboratory

metrolabs1@gmail.com

MOVEABLE UNDER BENCH MODULES

These mobile module units with wheels can be used to utilise under table space while leaving the structure of the table itself unaltered. Their portability ensures extended utility over a wide area. Cleaning around the under-bench space, implementation and service of resource lines for plumbing, power, etc, is much easier. Highly customizable, you can choose the modules to have drawers, shelves or both- whichever would suit you the best. A stainless steel option is available..

TYPES

- ⇒ Overhead and Under Bench Shelving
- ⇒ Overhead and Under Bench Cabinets
- ⇒ Stainless Steel options available
- ⇒ Portable and Modular
- ⇒ Non invasive lab upgrade
- ⇒ Can be opted with or without drawers

ADVANTAGES

- ⇒ Cost Effective
- ⇒ Re-configuration Options
- ⇒ Total Adaptability to Meet Your Lab's Needs
- ⇒ Designed to Meet Safety Standards
- ⇒ Equipping Your Lab with Modular Furniture
- ⇒ Allows fast and easy re-configuration with minimal disruption
- ⇒ Optimizes lab functionality without increase in spatial requirement
- ⇒ Increases the available storage space
- ⇒ Enables greater productivity and improved ergonomics
- ⇒ Ideal for retrofits and renovation projects
- ⇒ Accommodations for facilities such as gas, electricity, plumbing, etc. can be made on-bench, overhead and behind the bench

LAB CUPBOARD MODELS

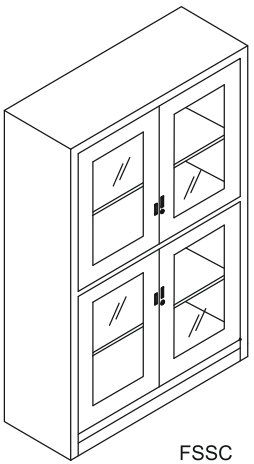
FSSC

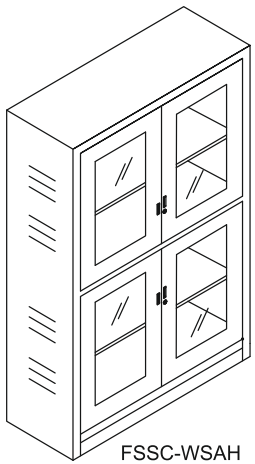
FSSC-WSAH

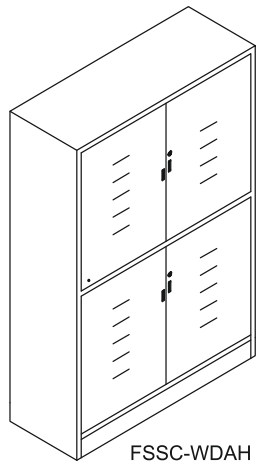
FSSC-WDAH

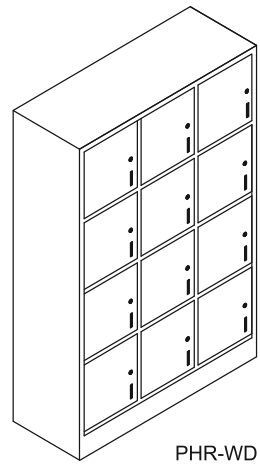
PHR-WD

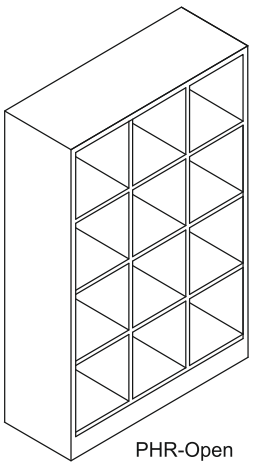
PHR-Open

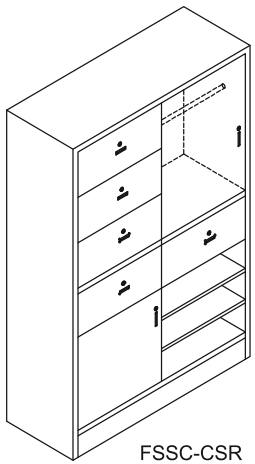
FSSC-CSR

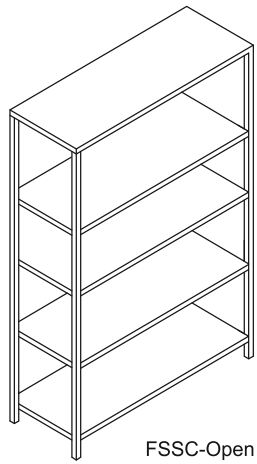
FSSC-Open

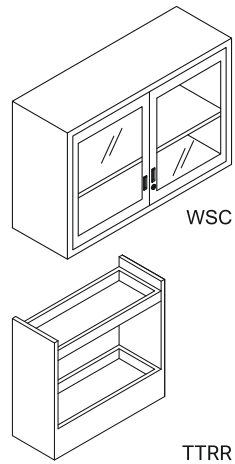
WSC
TTRR

Legend

FSSC -Floor Standing Storage Cupboard;
WSAH -With Side Air ventilation Holes;
WDAH - With Door Air ventilation Holes;
CSR -Chemical Storage Rack;
FSOR - Floor Standing Open Rack (Heavy Duty)

PHR-WD - Pigeon Hole Rack with Doors;
PHR-Open - Pigeon Hole Rack without Doors;
WSC - Wall Storage Rack;
TTRR - Table Top Reagent Rack;

metrolabs1@gmail.com

STORAGE CUPBOARDS & RACKS

MCSC3155WOD - (3 x 1.5 x 5 feet)
MCSC3156WOD - (3 x 1.5 x 6 feet)
MCSC3158WOD - (3 x 1.5 x 8 feet)
Without Duct (Exhaust)

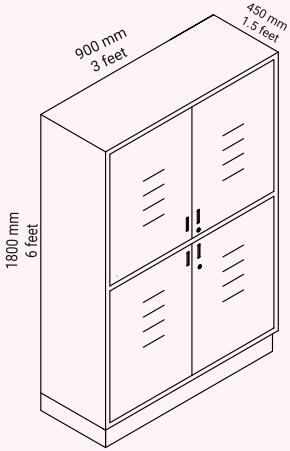

Chemical Storage Cabinet

MCSC3155WD - (3 x 1.5 x 5 feet)
MCSC3156WD - (3 x 1.5 x 6 feet)
MCSC3158WD - (3 x 1.5 x 8 feet)
With Duct, Motor and blower (Exhaust)

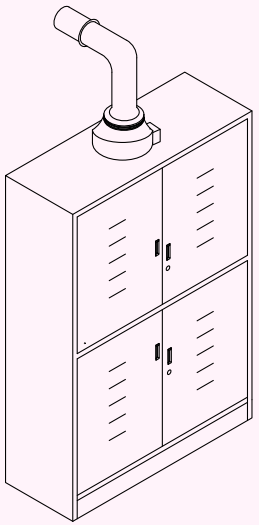

Chemical Storage Cabinet with Duct

MRR21122T- (2.16 x 0.83 x 2 feet)
MRR322T- (3 x 0.83 x 2 feet)
MRR211253T- (2.16 x 0.83 x 3 feet)
MRR3123T- (3 x 0.83 x 3 feet)

2 tire

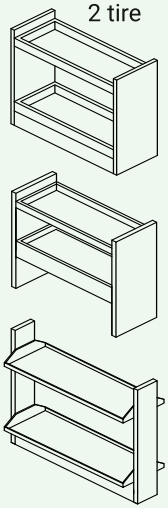

3 tire

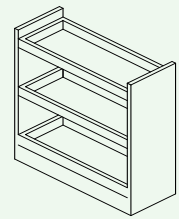

Reagent Racks

WSC212WGD - (2 x 1 x 2 feet)
WSC312WGD - (3 x 1 x 2 feet)

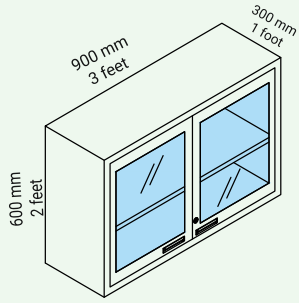

1 plate,
2 partitions

Wall Storage Cupboards

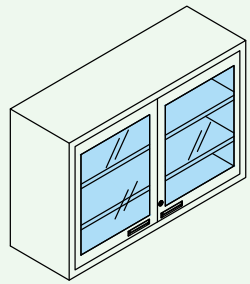

2 plates,
3 partitions

MFSSC31564GD4P - (3 x 1.5 x 6 feet)
MFSSC31564GD6P - (3 x 1.5 x 6 feet)
MFSSC41564GD4P - (4 x 1.5 x 6 feet)
MFSSC41564GD6P - (4 x 1.5 x 6 feet)
MFSSC51564GD4P - (5 x 1.5 x 6 feet)
MFSSC51564GD6P - (5 x 1.5 x 6 feet)

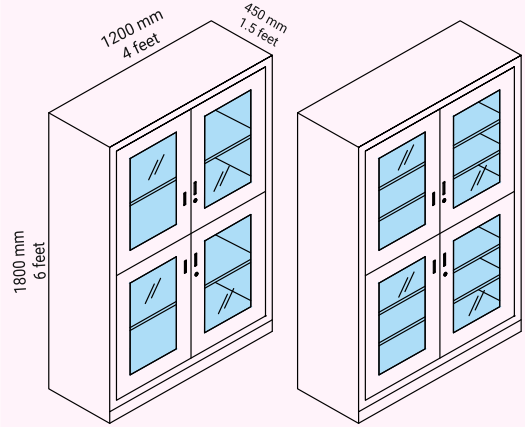

Floor Standing Storage Cupboards

5 plates, 6 Partitions

3 plates, 4 Partitions

Floor Standing Display Cupboards

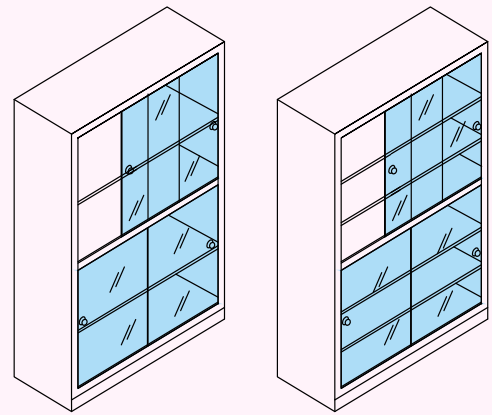

STORAGE CUPBOARDS & RACKS

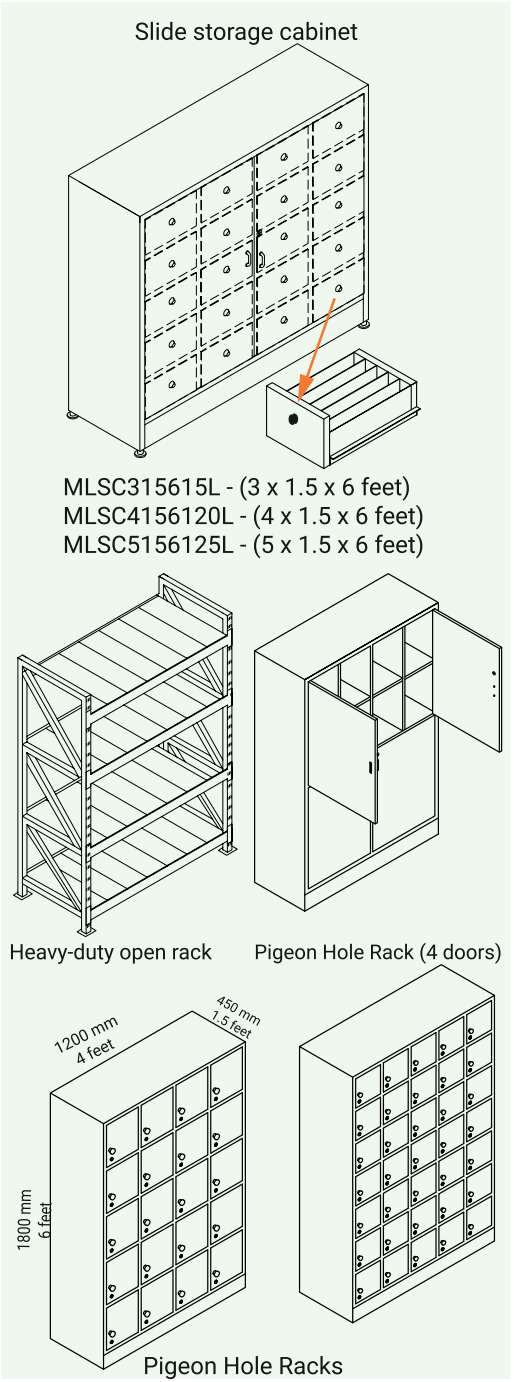

Custom designed for you with GI sheets and chemical-resistant epoxy powder coating, our storage cupboards provide a convenient, reliable and enduring storage solution for lab equipment. Closed sheet or glass panelling can be opted for cabinet doors. Specific types sizes and accessories are incorporated with your feedback.

Floor standing storage cupboards are for laboratories that require more storage space without sacrificing stability. They rest on the floor, providing greater load bearing capacity than wall-mounted options. We calculate stability index point to ensure they can't be toppled. They offer higher accessibility, making them an ideal choice for frequently used items.

Wall mounted storage cupboards are an ideal storage solution for laboratories with limited floor space. These cupboards are mounted on the wall, freeing up valuable floor space for other equipment. Additionally, they can be easily installed at any height.

Floor standing heavy-duty open racks provide an exceptional storage solution for heavier laboratory equipment. With a robust frame structure and double material thickness in critical areas, they can handle heavier loads.

Pigeon Hole Racks feature high-quality locks for added security and durable construction to ensure safety and long-lasting use. With a variety of sizes and configurations available, our pigeon hole racks provide the perfect solution for any laboratory storage needs.

Chemical Storage Cupboards come with additional PP lining over 60 – 80 microns of epoxy powder coating. Optionally it features a built-in exhaust system that could be opted with scrubbing filters that remove harmful fumes and vapours, promoting a safer work environment.

Microscopic slide storage cabinets are a critical tool for labs working with slides. These cabinets provide a secure and organized space for storage, preventing cross-contamination and ensuring quick and easy access. Additionally, each drawer is equipped with multiple separated channels to store slides, maximizing storage capacity and organization.

metrolabs1@gmail.com

CHEMICAL & FLAME PROOF STORAGE CUPBOARDS

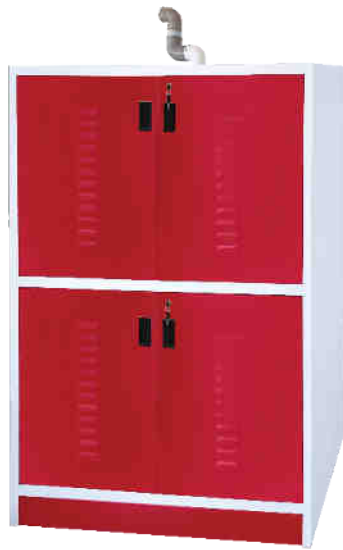

Made of 20 Gauge G.I. Electro-Galvanished sheets finished with an epoxy powder coating. Storage Chamber will have 1 fixed horizontal partition with 4 shutters.

The Inner skin is 3mm thick. PP construction sheet on shelves. It will increase chemical resistance and it is exclusively formulated to resist the acids, bases, and solvents often used in laboratories. Special arrangements are made for ventilation.

Duct damper in PVC / PP construction. The shutters will be provided with air vents and aesthetic handles finished with an epoxy powder coating and branded locking arrangements.

- Long-Lasting
  No more rust! Ideal for corrosive chemicals.
- Safer
  Integrated sumps to contain spillages (sumps can be made to any capacity).
- 100% Customisable
  Designed to suit your application and lab to maximise storage and lab space.
- Easy To Clean
  Premium polypropylene has an ultra-low surface tension to resist staining.

Flammable Storage Cupboard

STAINLESS STEEL LAB FURNITURE

Our highest quality brushed satin stainless steel range of products is your best choice for applications in clean rooms, Quality analysis labs, Quality control labs, and research and development labs.

Metrolabs stainless steel sinks are durable, don't rust or corrode and perform for years of intense usage. We supply stainless steel wash basins and sinks in conjunction with stainless steel worktops, cabinets, shelving and trolleys, including stainless steel mirrors.

Base cabinets, wall cabinets, drawer cabinets, crossover benches and tall cabinets are customised to perfectly fit customer needs. Doors are either plain with stainless steel 'D' handles or for use with hardware; with continuous recessed handles (vertical or horizontal); or with back-slope edges. The units are strong and durable, but also aesthetically pleasing, with a clean and professional appearance.

We offer a wide range of bespoke products all manufactured from high quality 304 / 316 / 316L grade stainless steel. Customer focused design and product customization ensure the perfect fit for your laboratory, which is highly necessary for products like pass-boxes, where the precision of fit is very important.

SS Sink unit with storage

SS Table

SS Shoe Rack

SS Sink Cupboard

SS TOP - CR tube
foldable furniture

SS TOP - Under bench
GI Modular Furniture

SS Trolley

metrolabs1@gmail.com

STAINLESS STEEL LAB FURNITURE

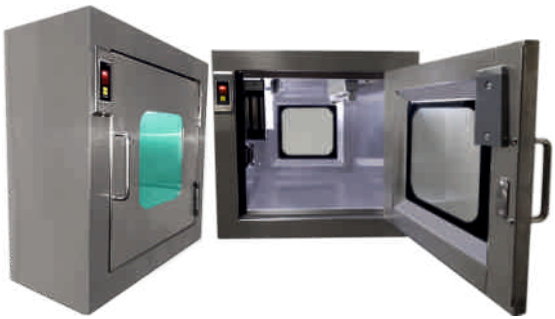

Pass Box

Sink Unit

Cross Over Bench

Storage Cupboard

Locker Cupboard

Fume hood

Trolley with handle

Trolley

Trolley with steps

LAB FURNITURE COUNTER TOPS

GRANITE: Highly scratch and chip-resistant and resilient to regular wear and tear. Having high compressive strength, higher load-bearing capabilities are exhibited. Our granite countertops are sealed with epoxy impregnation and are surface deactivated. Ultrasonic gauge tested, each piece is exclusively screened for micro-cracks.

Granite

SCRATCHING & CHIPPING RESISTANT; GRANITE IS EASY TO CLEAN; HIGH AFFORDABILITY; NATURAL STONE; EACH GRANITE SLAB IS UNIQUE; SEALED RESISTANT TO HEAT, STAINS AND MOISTURE; GRANITE COUNTERS ARE PERFECTLY FLAT; VERY USER FRIENDLY; ADDS AESTHETIC PROFESSIONALISM TO YOUR LABORATORY; MANY COLOUR OPTIONS.

EPOXY: The heavy-performance composite material comprises various reinforcements in an epoxy matrix. Can operate under most extreme chemical environments. Cured at high temperatures, the countertop does not deform with temperature. Possessing exceptional stability, the failure rate is low. Slightly susceptible to an external impact load. Manufactured, not mined - non-porous and available in many colours.

Epoxy Resin

ANTI-CORROSION; THERMALLY RESISTANT; HIGH STABILITY; NON-TOXIC; BACTERIA RESISTANT; EASY MAINTAINANCE; EASY REPAIR; MANY COLOUR OPTIONS.

PHENOLIC RESIN: Manufactured by pressing resin-impregnated papers under high pressures and temperatures. The work-top surface has a coating to enhance moisture, wear, and chemical resistance. Useful for moderate-use labs where regular usage and cleanings are expected. Performs in temperatures up to 170°C.

Phenolic Resin

ECONOMICAL; RESISTANT TO ACID, ALKALI, REAGENTS; NON-TOXIC; EXTREMELY DURABLE.

STAINLESS STEEL: Stainless steel overlay with a stiffener inlay, Stainless steel countertops are the epitome of chemical and thermal inertness. The surface is completely non-reactive to most chemicals with very few exceptions. Entirely non-porous, resulting in ease in cleaning and maintenance. This makes it the prime choice for clean rooms. Stainless steel is not as scratch resistant as granite.

Stainless Steel

CHEMICALLY INERT; THERMALLY INERT; NON-POROUS; EASY TO CLEAN; PERFECT FOR CLEAN-ROOM APPLICATIONS; SLIGHTLY SUSCEPTIBLE TO SCRATCHES.

metrolabs1@gmail.com

STANDARD COLOUR COMBINATIONS AND SHADES

Important Note: Due to printing tolerance, lighting, and colour theory, the colours represented here may slightly differ from what the real colours would appear like in your lab.

Colour accurate shade cards are given prior to colour confirmation or on request.

LAB FURNITURE MAINTENANCE

DOs

- ⇒ Clean up liquid and dry spills immediately.
- ⇒ Protect the feet of lab apparatus with rubber, felt or a protective pad.
- ⇒ Place a trivet under all hot containers and components.
- ⇒ Extinguish all frames on the work surface.
- ⇒ Apply a thin coat of finish oil or Murphy's oil periodically on granite worktop surfaces.
- ⇒ Educate all users on the proper care of work surfaces / tops.

DON'TS

- ⇒ Do not drag items across the surface.
- ⇒ Do not cut, chop or strike items directly on the surface.
- ⇒ Do not drop items onto the surface.
- ⇒ Do not use abrasive sandpaper or metallic scouring pads on work surfaces or sinks.
- ⇒ Do not store chairs on the work surface without a protective covering such as cardboard.
- ⇒ Do not melt dry ice with hot water directly on the surface or in the sink as the thermal shock may break the joints or cause the sink to fracture.
- ⇒ Do not wax the surface (or use polish containing wax).

Work top cleaning

Clean the table surfaces using a general purpose detergent and warm water. After each cleaning, wipe with a clean, dry cloth. Clean the work tops according to a regular schedule, with spot cleaning as needed. Sand surfaces carefully when appropriate. Use the right cleaning methods and products. Use appropriate finishing agents.

Under bench module cleaning

Wipe the under bench modules with a clean cloth soaked in distilled water, then wipe with a dry, clean cloth.

Do not use any cleaning agents.

BASIC LAB SAFETY RULES

Know emergency exit routes. Avoid skin and eye contact with any chemicals. Minimize all chemical exposures.

Assume that all chemicals of unknown toxicity are highly toxic.

Avoid distracting or startling persons working in the laboratory.

Combine reagents in their appropriate order, such as adding acid to water, never the opposite.

Do not taste or intentionally sniff chemicals. Never consume or store food and beverages. Never apply cosmetics in the lab.

Wash the exposed areas of the skin prior to leaving the laboratory.

Long hair and loose clothing must be pulled back and tied.

Lab safety goggles and gloves should be worn in the chemistry lab.

Avoid wearing jewellery in the lab as this can pose multiple safety hazards.

Clothing made of synthetic fibres should not be worn while working in lab.

METROLABS

Lab Furniture | Fume Hood | Anti-Vibration Table | Laminar Air Flow

We are there when you need us !

Please Visit our stall at major exhibitions!
for more information

www.metrolabs.biz

Chennai | Bengaluru | Pune | Hyderabad | Vizag
Bhubaneshwar | Kolkata | Lucknow | Delhi

metrolabs1@gmail.com

98409 31231 | 98409 31233 | 97910 33312